Nakamichi®

SHOCKWAFE ULTRA 9.2

SSE TECHNOLOGY

USER MANUAL

Dolby ATMOS

dts X

COMPATIBLE WITH Dolby Vision

HDMI 2.0 4K HDR HDCP 2.2

Bluetooth Qualcomm aptX

STOP

PLEASE DO NOT RETURN THIS UNIT

ONE-STOP SUPPORT SOLUTION

www.nakamichi-usa.com/faq

CUSTOMER CARE

support@nakamichi-usa.com

(415) 805 6913

(Weekdays 10am - 7pm PST; Saturday, Holidays 10am - 5pm PST)

SPEAK

TO OUR SHOCKWAFE NINJAS IN USA TODAY

IMPORTANT SAFETY INSTRUCTIONS

Your Unit is designed and manufactured to operate within defined design limits, and misuse may result in electric shock or fire. To prevent your Unit from being damaged, the following rules should be observed for its installation, use, and maintenance. Please read the following safety instructions before operating your Unit. Keep these instructions in a safe place for future reference.

- Read these instructions.
- Keep these instructions.
- Heed all warnings.
- Follow all instructions.
- Do not use this apparatus near water.
- Clean only with a dry cloth.
- Do not block any ventilation openings. Install in accordance with the manufacturer's instructions.
- Do not install near any heat sources such as radiators, heat registers, stoves, or other apparatus (including amplifiers) that produce heat.
- Do not defeat the safety purpose of the polarized or grounding-type plug. A polarized plug has two blades with one wider than the other. A grounding type plug has two blades and a third grounding prong. The wide blade or the third prong are provided for your safety. If the provided plug does not fit into your outlet, consult an electrician for replacement of the obsolete outlet.
- Protect the power cord from being walked on or pinched, particularly at plugs, convenience receptacles, and the point where they exit from the apparatus.
- Only use attachments/accessories specified by the manufacturer.
- Use only with the cart, stand, tripod, bracket, or table specified by the manufacturer, or sold with the apparatus. When a cart is used, use caution when moving the cart/ apparatus combination to avoid injury from tip-over.
- Unplug this apparatus during lightning storms or when unused for long periods of time.
- Refer all servicing to qualified service personnel. Servicing is required when the apparatus has been damaged in any way, such as when the power supply cord or plug is damaged, liquid has been spilled or objects have fallen into the apparatus, the apparatus has been exposed to rain or moisture, does not operate normally, or has been dropped.
- To reduce the risk of electric shock or component damage, switch off the power before connecting other components to your Unit.
- Unplug the power cord before cleaning your Unit. A damp cloth is sufficient for cleaning. Do not use a liquid or a spray cleaner on your Unit. Do not use abrasive cleaners.
- Always use the accessories recommended by the manufacturer to insure compatibility.
- When moving your Unit from an area of low temperature to an area of high temperature, condensation may form in the housing. Wait before turning on your Unit to avoid causing fire, electric shock, or component damage.
- Slots and openings in the back and bottom of the cabinet are provided for ventilation. To ensure reliable operation of your Unit and to protect it from overheating, be sure these openings are not blocked or covered. Do not place your Unit in a bookcase or cabinet unless proper ventilation is provided.
- Never push any object into the slots and openings on your Unit enclosure. Do not place any objects on the top of your Unit. Doing so could short circuit parts causing a fire or electric shock. Never spill liquids on your Unit.
- When connected to a power outlet, power is always flowing into your Unit. To totally disconnect power, unplug the power cord.
- Do not overload power strips and extension cords. Overloading can result in fire or electric shock.
- The wall socket should be located near your Unit and be easily accessible.
- Keep your Unit away from moisture. Do not expose your Unit to rain or moisture. If water penetrates into your Unit, unplug the power cord and contact your dealer. Continuous use in this case may result in fire or electric shock.
- Do not use your Unit if any abnormality occurs. If any smoke or odor becomes apparent, unplug the power cord and contact your dealer immediately. Do not try to repair your unit yourself.
- Avoid using dropped or damaged appliances. If your Unit is dropped and the housing is damaged, the internal components may function abnormally. Unplug the power cord immediately and contact your dealer for repair.
- Continued use of your Unit may cause fire or electric shock.
- Do not install your Unit in an area with heavy dust or high humidity. Operating your Unit in environments with heavy dust or high humidity may cause fire or electric shock.
- Ensure that the power cord and any other cables are unplugged before moving your Unit.
- When unplugging your Unit, hold the power plug, not the cord. Pulling on the power cord may damage the wires inside the cord and cause fire or electric shock. When your Unit will not be used for an extended period of time, unplug the power cord.
- To reduce risk of electric shock, do not touch the connector with wet hands.
- Insert the remote control batteries in accordance with instructions. Incorrect polarity may cause the battery to leak which can damage the remote control or injure the operator.
- The marking label of the subwoofer was located on the external bottom enclosure of the product.
- The equipment shall be used at maximum 35 degree Celsius ambient temperature.
- See the important note and rating located on the back of the unit.
- WARNING - This equipment is not waterproof. To prevent a fire or shock hazard, do not place any container filled with liquid near the equipment (such as a vase or flower pot) or expose it to dripping, splashing, rain, or moisture.
- To prevent injury, this apparatus must be securely attached to the floor/wall in accordance with the installation instructions.
- CAUTION - Danger of explosion or fire if batteries are mistreated. Replace only with the same or specified type.
- Do not leave the batteries exposed to direct sunlight for a long period of time with doors and windows closed. Do not disassemble the batteries or dispose of it in fire.
- Where the MAINS plug or appliance coupler is used as the disconnect device, the disconnect device shall remain readily operable.

WARNING: To reduce the risk of fire or electric shock, do not expose this apparatus to rain or moisture.

This lightning flash with arrowhead symbol within an equilateral triangle is intended to alert the user to the presence of not isolated dangerous voltage within the product that may be sufficient magnitude to constitute a risk of shock to persons.

The exclamation point within an equilateral triangle is intended to alert the user to the presence of important operating and servicing instructions in the literature accompanying the appliance

Warning: This equipment is a Class II or double insulated electrical appliances. It has been designed in such way that it does not require a safety connection to electrical earth.

TABLE OF CONTENTS

Package Contents 4
Controls and Connections 5
Setting up Your Home Theater
1. Speaker Placements 8
2. Connecting Surround Speakers to Subwoofers 11
3. Turning On Your Soundbar System 12
4. Connecting Your TV 13
5. Listening to Your Soundbar 15
6. Setting up Your TV 16
7. Connecting Your Content Devices 17
8. Setting up Your Content Devices 22

Controlling the Soundbar
Remote Control Overview 23
Selecting Different Input Sources on Your Remote 24
Accessing Audio Presets on Your Remote 25
Accessing Advanced System Settings on Your Remote 26
Accessing Channel Mapping/Upmixing on Your Remote 27
Accessing Menu Functions on Your Remote 28
Accessing SSE Mode on Your Remote 29
Accessing Info on Your Remote 30
Accessing Room Size on Your Remote 31
Saving Audio Settings to System Memory 32

Wireless Bluetooth Audio Streaming 33
Re-linking the Subwoofers with the Soundbar 34
Wall-Mounting Your Soundbar System 35
Firmware Upgrade 37
Help & Troubleshooting 38
Specifications 39
Warranty Information & Customer Support 40
Glossary 41
Legal & Compliance 43

PACKAGE CONTENTS

1 x Soundbar

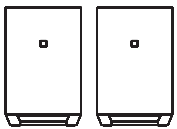

2 x Wireless Subwoofers

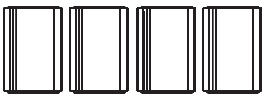

4 x Surround Speakers

1 x Remote Control with Batteries

2 x Subwoofer Power Cables
1 x Soundbar Power Cable
(Length: 5 ft.)

4 x Satellite Speaker Audio Cables
(Length: 32.8 ft.)

1 x HDMI Cable
(Length: 5 ft.)

1 x Digital Optical Cable
(Length: 5 ft.)

3.5mm Audio Cable
(Length: 4 ft.)

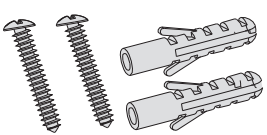

20 x Wall Screws and Brackets

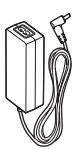

Soundbar Power Adapter
(Length: 5 feet)

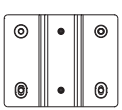

2 x Satellite Speaker Mounting Brackets (Dipole)

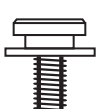

2 x Mounting Screws
(Soundbar)

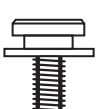

8 x Mounting Screws
(Satellite Speakers)

10 x Soundbar and
Satellite Wall Mount Brackets

Mounting Guide

CONTROLS & CONNECTIONS

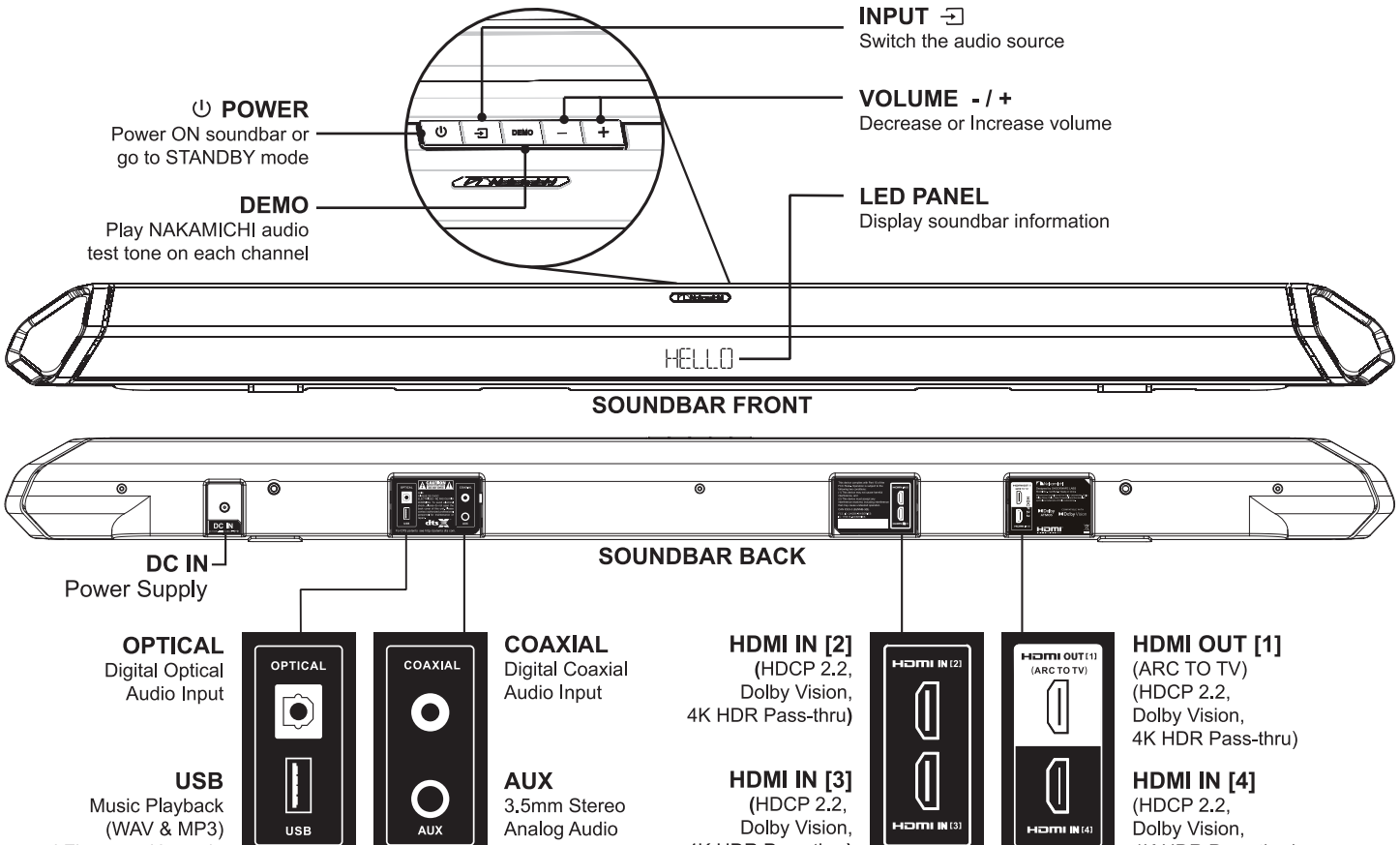

REMOTE CONTROL

A Remove the battery cover by pulling it down from the remote

B Insert the included batteries and gently push the battery cover back into place

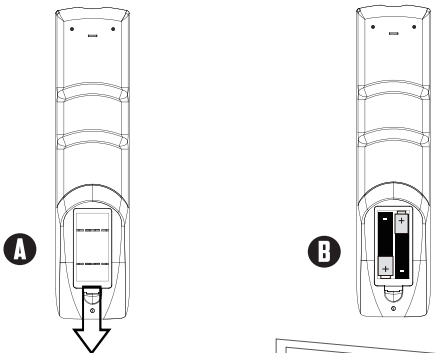

REMOTE ANGLE

Tilt the remote downwards by 15-25 degrees for best response (as if you are aiming the remote slightly towards the ground)

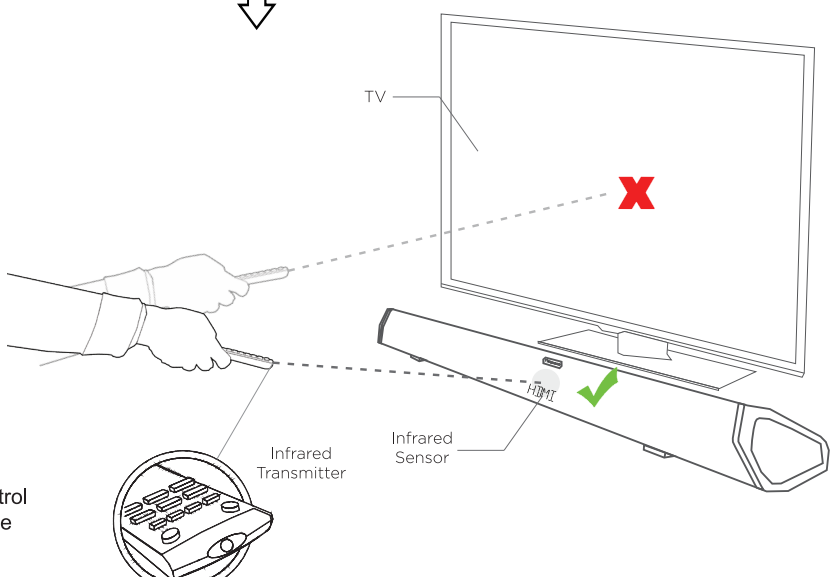

Once HDMI-CEC is set up, use your TV/content device's remote control to power ON your soundbar.

Always use your TV's remote control to power OFF the system.

DID YOU KNOW?

Once HDMI-CEC is set up, TV's HDMI-CEC has taken control over soundbar's remote ON/OFF and other functions. Those functions will not longer work on the soundbar remote.

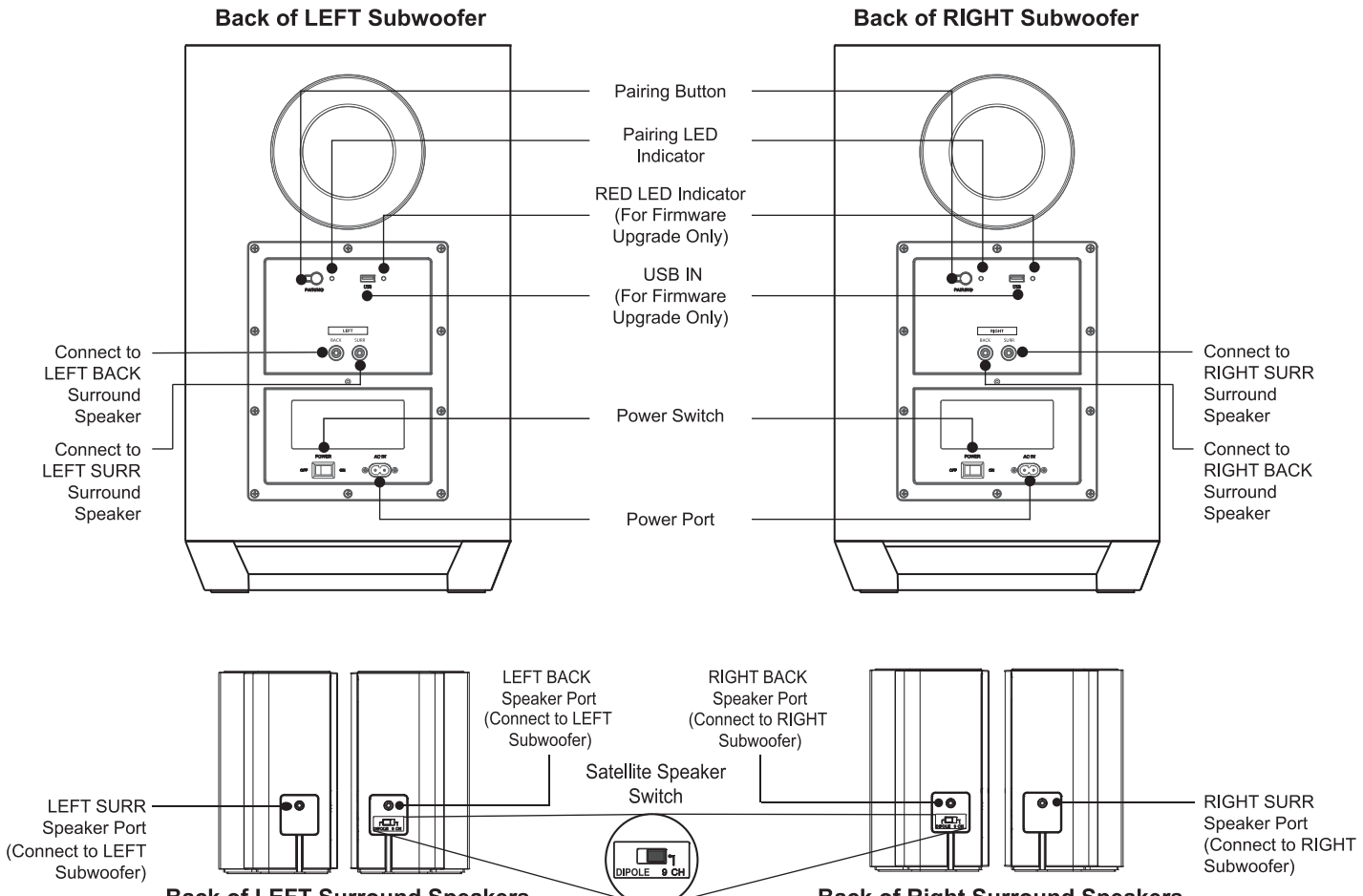
Back of LEFT Subwoofer
Back of RIGHT Subwoofer
Pairing Button
Pairing LED Indicator
RED LED Indicator (For Firmware Upgrade Only)
USB IN (For Firmware Upgrade Only)
Power Switch
Power Port
Connect to LEFT BACK Surround Speaker
Connect to LEFT SURR Surround Speaker
Connect to RIGHT SURR Surround Speaker
Connect to RIGHT BACK Surround Speaker
LEFT BACK Speaker Port (Connect to LEFT Subwoofer)
RIGHT BACK Speaker Port (Connect to RIGHT Subwoofer)
Satellite Speaker Switch
LEFT SURR Speaker Port (Connect to LEFT Subwoofer)
RIGHT SURR Speaker Port (Connect to RIGHT Subwoofer)
DIPOLE
9 CH
Back of LEFT Surround Speakers
Back of Right Surround Speakers

SETTING UP YOUR HOME THEATER

For recommended speaker stands, scan QR code or visit:
bit.ly/92-speaker-stands

1 SPEAKER PLACEMENTS

The soundbar system features modular surround speakers, giving you placement flexibility to suit your listening environment.

OPTION A: BEST 9.2CH SURROUND (DETACHED)

Recommended speaker placement with optimal distance. Actual distance can vary based on actual room layout.

Tips:
Toggle the surround speaker switch to 9CH mode.

The bottom speaker driver of the surround speakers should be at ear level and pointing directly at the listener's sitting area for optimal performance.

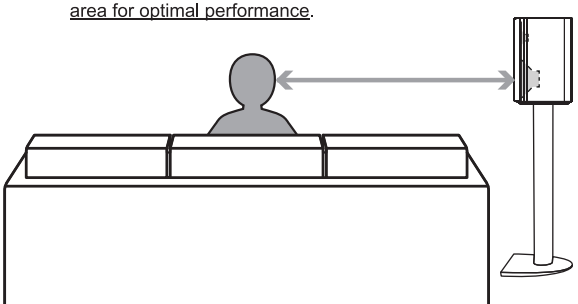

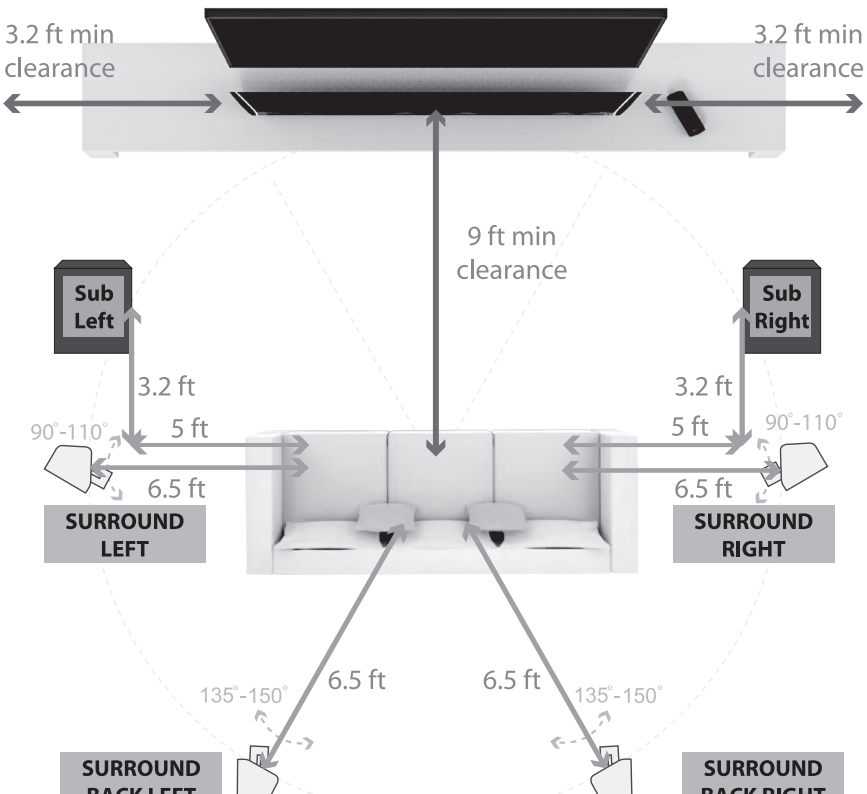

Note: Illustration is not to scale. Speaker stands are not included.

OPTION B: BETTER DIPOLE SURROUND (ATTACHED)

Recommended speaker placement with optimal distance. Actual distance can vary based on actual room layout.

Tips:
The bottom speaker driver of the surround speakers should be at ear level and pointing away from the listener's sitting area for optimal performance.

Toggle the surround speaker switch to DIPOLE mode.

Attaching the speakers for dipole setup

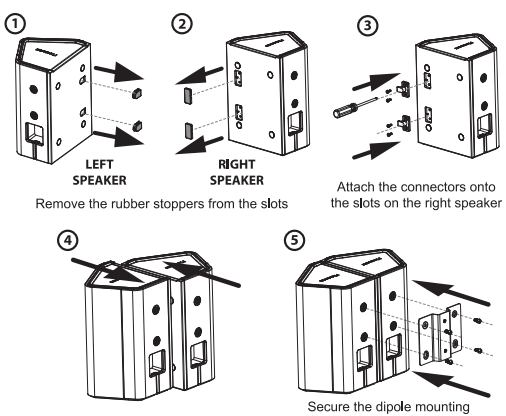

Note:
Illustration is not to scale. Speaker stands are not included.

For recommended speaker stands, scan QR code or visit:
bit.ly/92-speaker-stands

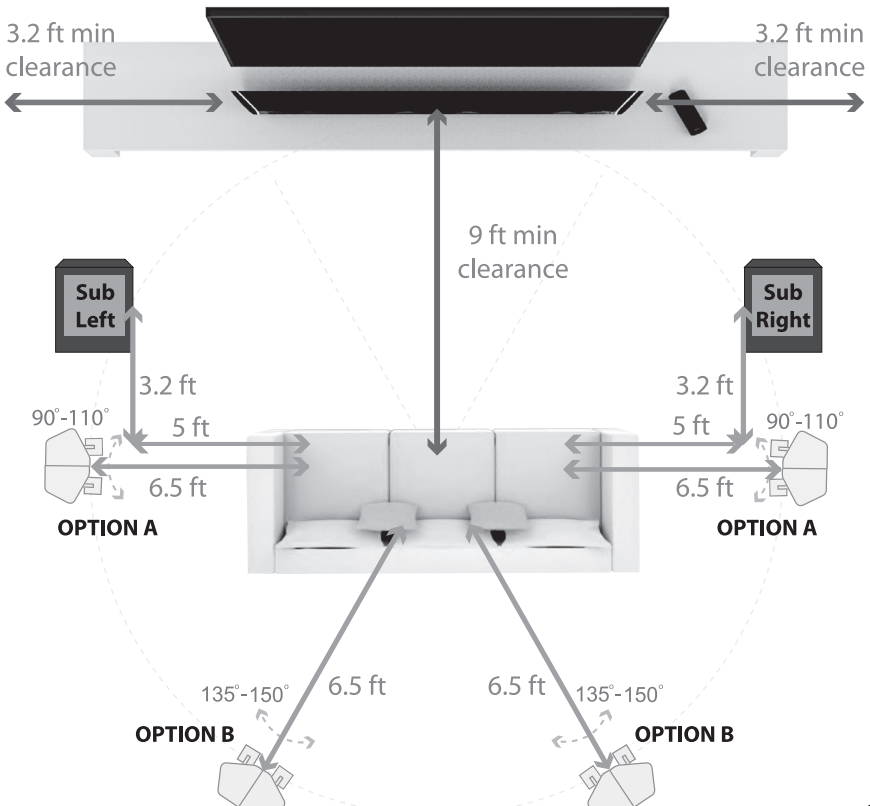

1 SPEAKER PLACEMENT (CONT.)

OPTION C: HYBRID 9.2CH ELEVATION

Lay the surround speakers down (drivers tilted upward in 2 modes, see illustration on the right) to enable vertical effects to bounce off the ceiling of your room.

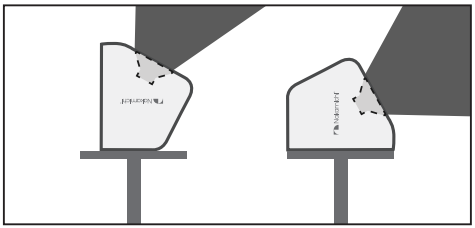

Elevation 1:
Vertical Effects-Centric Mode

Elevation 2:
Hybrid 360° Surround with Vertical Effects

OPTION C1: 9.2CH SIDE ELEVATION

For added perceptibility of height effects from both sides of the room

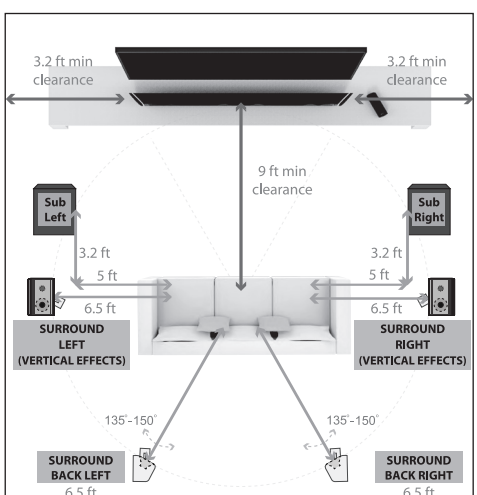

OPTION C2: 9.2CH REAR ELEVATION

For added perceptibility of height effects from the back of the room

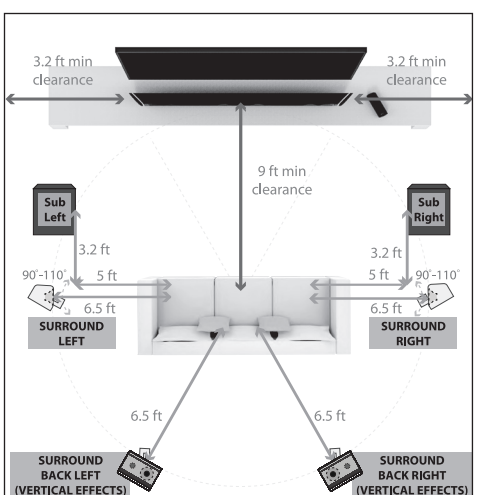

OPTION C3: 9.2CH ALL ELEVATION

For added perceptibility of height effects from sides and back of room

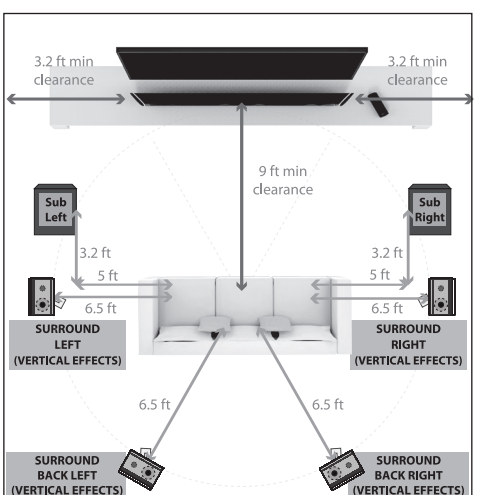

Note: Recommended speaker placement with optimal distance. Actual distance can vary based on actual room layout.

2 CONNECTING SURROUND SPEAKERS TO SUBWOOFERS

Connect SURROUND SPEAKERS to the ports on the back panel of SUBWOOFERS using the included surround speaker audio cables

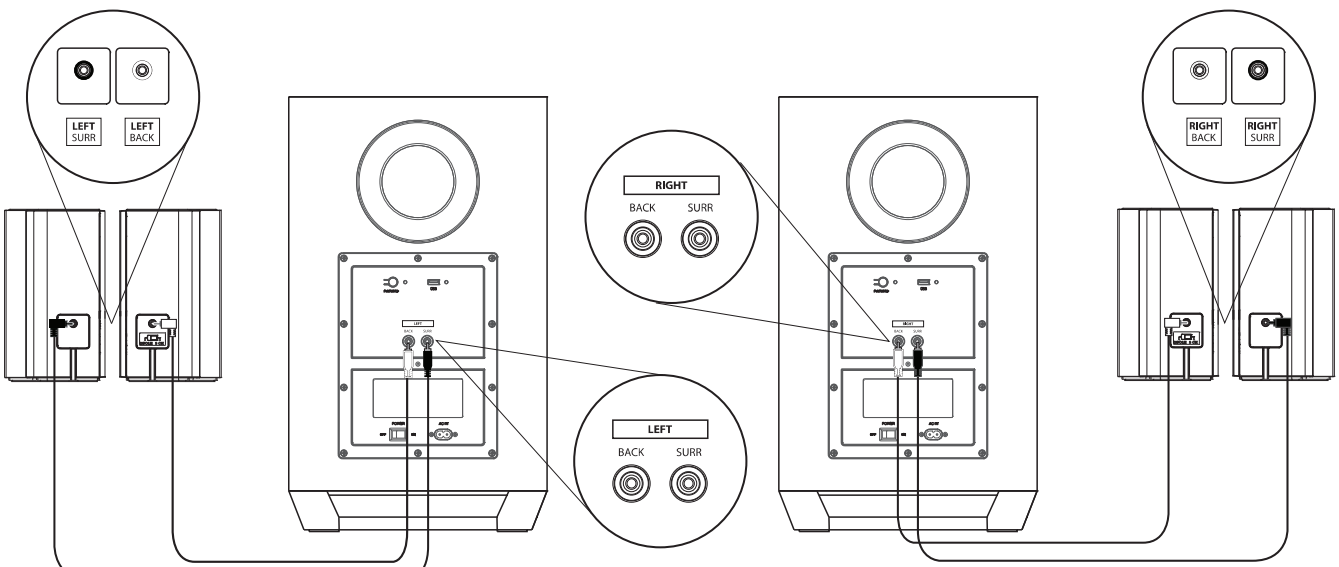

3 TURNING ON YOUR SOUNDBAR SYSTEM

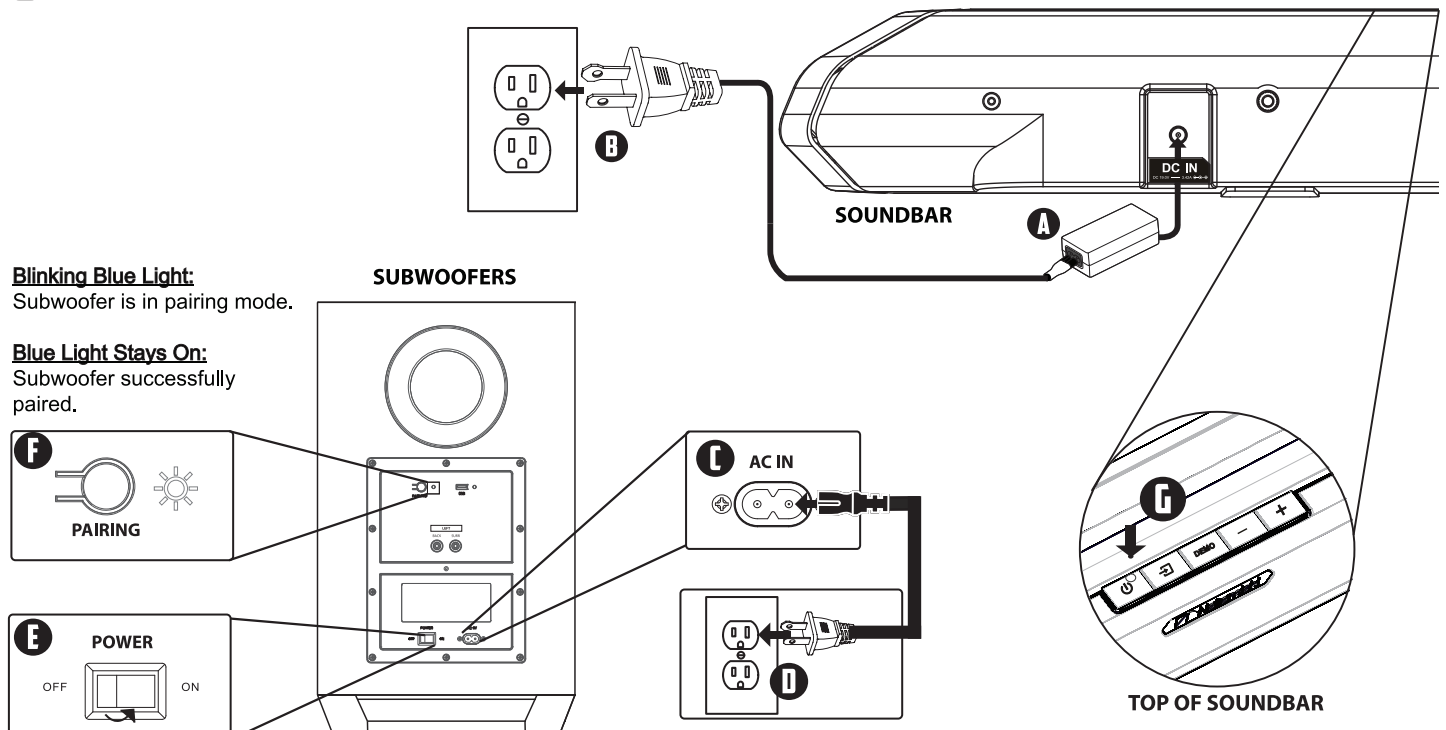

Note: Once soundbar is powered off, the blue LED lights on the subwoofers will continue blinking for 10 minutes before going into standby mode.

4 CONNECTING YOUR TV

Options for connecting your TV: HDMI BEST, OPTICAL BETTER, COAXIAL BETTER (See next page)

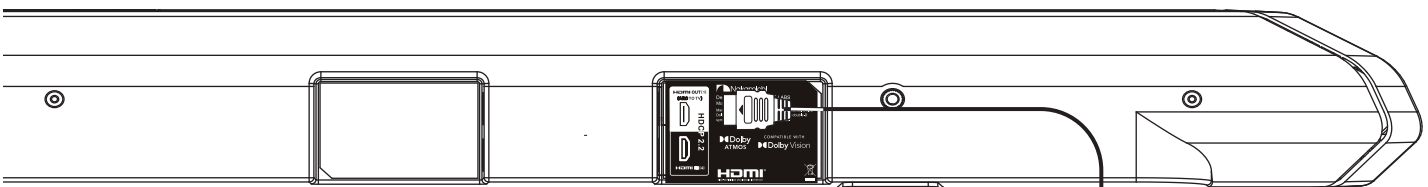

1. Connect one end of the HDMI cable to the **HDMI (ARC)** port at the back of your TV.
2. Connect the other end to the **HDMI OUT [1] (ARC TO TV)** port to your Nakamichi soundbar.

DID YOU KNOW?
HDMI Audio Return Channel (ARC) sends audio from the TV to our soundbar

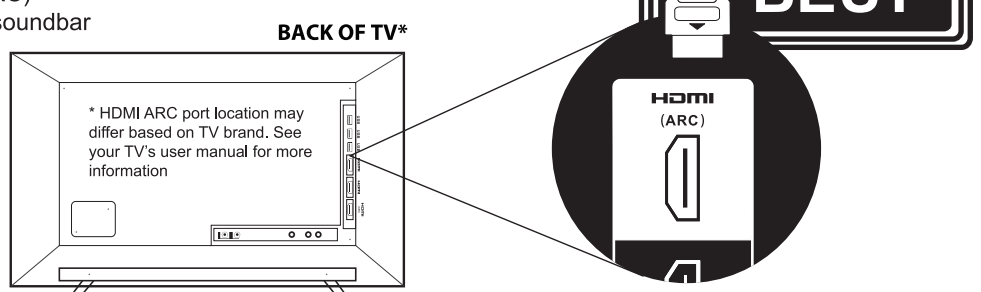

4 CONNECTING YOUR TV (CONT.)

Back of Soundbar

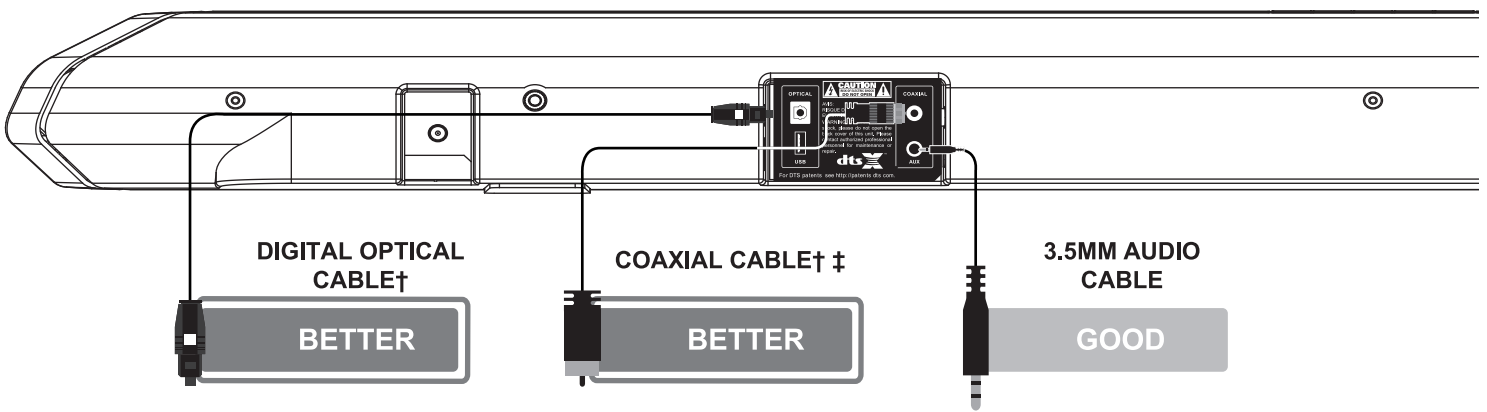

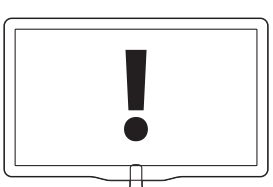

Note: Be sure to connect to a TV's audio output port, not an audio input port.

* Not all TVs have the audio outputs shown above. To connect the soundbar directly to your other devices (Blu-ray player, game system, etc.). See page 21 CONNECTING YOUR CONTENT DEVICES
* Cable appearance may differ from the ones supplied.

† If there is no audio during the setup, see page 38 for Help & Troubleshooting

‡ Cable not included

5 LISTENING TO YOUR SOUNDBAR

Press to power on/off the soundbar.

Important: Once HDMI-ARC/CEC is set up, always power on the soundbar by using your TV or content device's remote control power ON button.
Always use your TV's / content device's remote control to power OFF the system.

For more about HDMI-ARC/CEC, visit: nakamichi-usa.com/what-is-hdmi-cec/

HDMI ARC | HDMI 2 | HDMI 3
HDMI 4 | OPT | COAX

Press HDMI ARC button to listen to TV audio

Press HDMI 2/3/4/Optical/Coaxial button to listen to content from other devices

STEREO

All Channel Stereo / Stereo Only

ALL CHANNEL STEREO = Enables Stereo playback on surround speakers. Best for music, YouTube™ and boosting immersiveness for surround speakers.

STEREO ONLY = Enables playback with soundbar + Subwoofers only (no surround)

SETUP

Access to advanced system settings. (Button only works when soundbar is in any HDMI (ARC/2/3/4) mode, see page 26 for more information)

For expanded remote control guide, scan QR code or visit:
bit.ly/92-shockwafe-remote

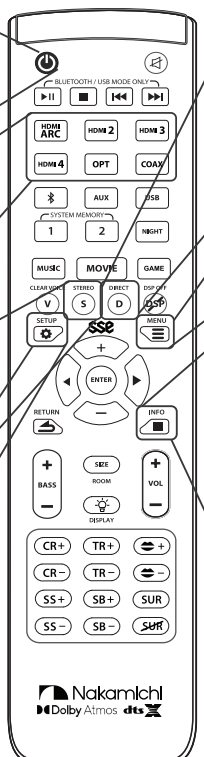

DIRECT

D

Set DIRECT to recommended settings below for best surround.
For Dolby/PCM audio:
DOLBY SURR = Dolby All-Channel Surround + Height
DOLBY UPMIX = Dolby All-Channel Surround Upmix
NATIVE = Playback based on original surround format encoded for source material
For DTS encoded content only. Cannot enable when Dolby or PCM content is playing
NEURAL X = DTS All Channel Surround Sound Upmix

(See page 27 ACCESSING CHANNEL MAPPING/UPMIXING / DOWN-MIXING ON YOUR REMOTE)

MENU

Access to firmware upgrade and wireless subwoofers pairing. (Button only works when soundbar is in USB mode only, see page 28 ACCESSING MENU FUNCTIONS ON YOUR REMOTE)

INFO

Press INFO button to see the source audio format on the soundbar's LED display:
DOLBY ATMOS TRUEHD
(Dolby Atmos encoded Dolby TrueHD)
DOLBY ATMOS D PLUS
(Dolby Atmos encoded Dolby Digital Plus)
DOLBY ATMOS MAT**
(Dolby Atmos metadata into lossless pulse-code modulation)
DOLBY TRUEHD
DOLBY D PLUS (Dolby Digital Plus)
DOLBY DIGITAL
DTS X
DTS-HD MA (DTS HD Master Audio)
DTS HD (DTS High Definition Audio)
DTS DIGITAL (DTS Digital Surround)
LPCM 7.1 (Linear Pulse Code Modulation 7.1)
LPCM 5.1 (Linear Pulse Code Modulation 5.1)
PCM 2.0 (Pulse Code Modulation)

** **Xbox One X/S and Apple TV 4K** come with a Dolby Atmos MAT encoder, which is designed to encode, decode and incorporate Dolby Atmos metadata into lossless pulse-code modulation (PCM) audio, allowing listeners to experience Dolby Atmos even in PCM audio.

DID YOU KNOW?
Dolby Atmos is the latest Dolby's object-based 3D surround sound format. It is encoded into Dolby TrueHD or Dolby Digital Plus stream with metadata to extract and place the objects in relevant positions.

6 SETTING UP YOUR TV

All units sold since Aug 2019 can receive Dolby Atmos surround via TV's eARC when streaming with TV's smart apps like Netflix (Note: not all TVs can output Atmos.)

What is HDMI Audio Return Channel (ARC)?

Using HDMI ARC, your TV can send audio to the soundbar using a HDMI cable. You will need to connect your soundbar to your TV's HDMI ARC port using a high speed HDMI 2.0 cable.

Audio settings for TV*

Setting the audio output:
A) Go to Settings > Sound
B) Select Speaker Settings
C) Set as HDMI Audio Out

Setting the audio format:
A) Go to Settings > Sound > Additional Settings
B) Select Audio Format
C) Set as Dolby Digital / DTS / Bitstream
(whichever is available)

What is CEC?

CEC is a HDMI protocol that is only available when:
1. Your TV is CEC enabled. (Check with your TV manufacturer for more information)
2. The soundbar and TV is connected via a HDMI cable through the ARC ports.
By doing so, you are able to control the soundbar's volume and power functions with the TV remote.

Enabling CEC†

From the SYSTEM menu, enable CEC and ARC (SAC)† functions.

From the CEC menu, select Device Discovery to register the soundbar with the TV.

Enable CEC for TV only. Do not enable CEC for other source devices or inputs may switch randomly.

To disable CEC for the soundbar, see page 26.

* Steps may differ based on TV brand. See your TV's user manual for more information.

† HDMI-CEC TV Trade names: Samsung (Anynet+), Sharp (Aquos Link), Sony (Bravia Sync), LG (SIMPLINK), Panasonic (HDAVI Control / EZ Sync / Viera Link), Philips (EasyLink), Vizio (CEC), Hitachi (HDMI-CEC). Naming may differ based on TV brand. See your TV's user manual for more information.

Visit **nakamichi-usa.com/best-sound** for expanded list of TVs' audio settings instructions. Visit **bit.ly/hdmi-cec-settings** or scan QR Code for HDMI-CEC setup instructions by device

If your devices are not listed on our website, please check with the device manufacturer's manual

7 CONNECTING YOUR CONTENT DEVICES
HDMI CONNECTION SETUP

Use our "**Perfect Device Matching Tool**" to create a custom setup guide based on your TV and devices. Scan QR code or visit bit.ly/device-matching-tool

! HDMI cables transmit both audio and video content. To view video from these devices, turn the soundbar on, then set the **soundbar input** to HDMI IN [2], HDMI IN [3] or HDMI IN [4]. Set your **TV input** to the HDMI ARC port which the soundbar is connected.

Back of Soundbar

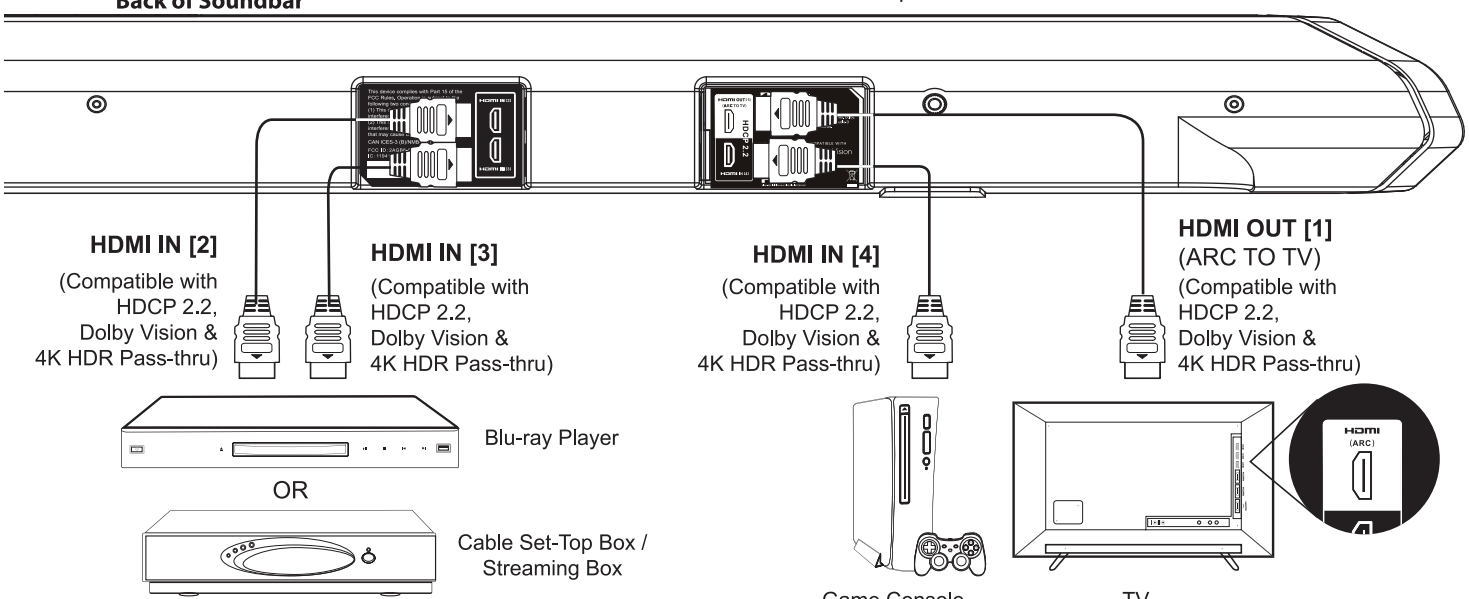

! Connect devices with the same HDCP standards for seamless switching between sources. If there are devices with different HDCP standards, connect all HPCP 2.2 devices to soundbar while connecting HDCP 1.4/2.0/2.1 devices to TV to avoid audio and video instability.

* Cables may appear differently from the ones supplied.

7 CONNECTING YOUR CONTENT DEVICES (CONT.)
NON-HDMI CONNECTION SETUP

Use our "Perfect Device Matching Tool" to create a custom setup guide based on your TV and devices. Scan QR code or visit bit.ly/device-matching-tool

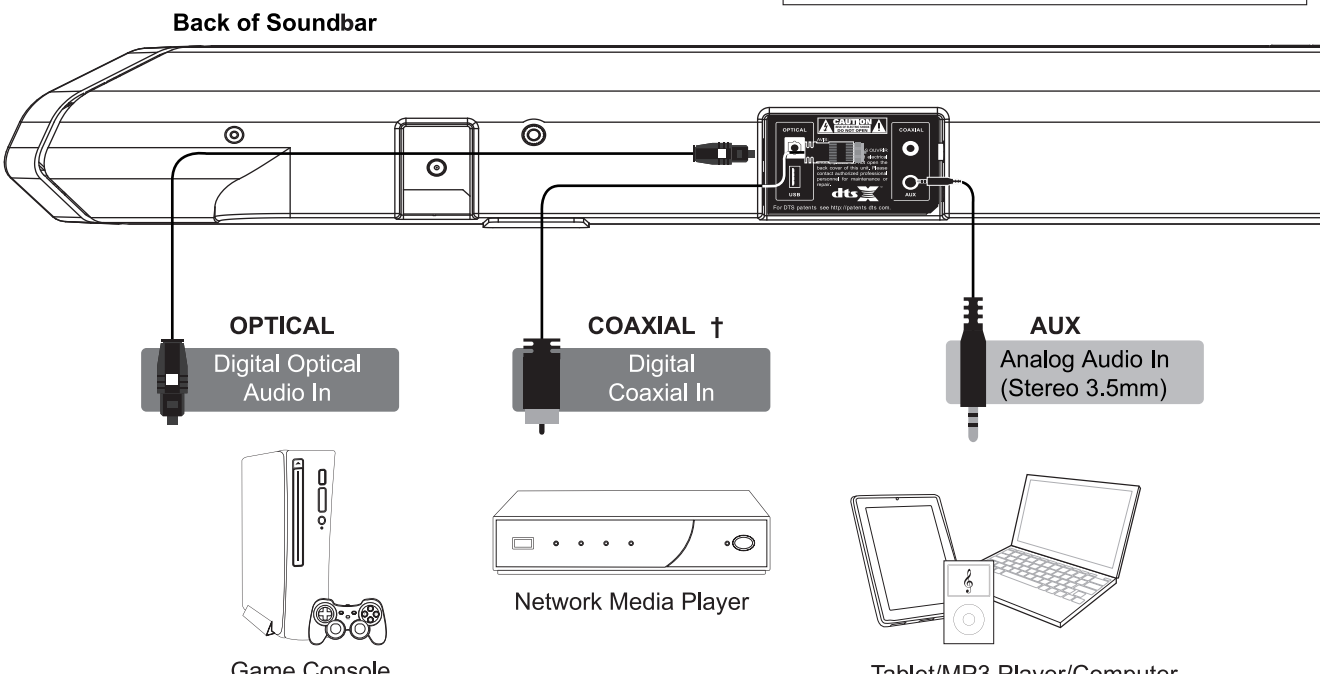

† Cable not included

! Dolby Atmos and DTS:X audio are not supported on Optical, Coaxial and Aux connections

7 CONNECTING YOUR CONTENT DEVICES
ADVANCED SETUP - FOUR-DEVICE SETUP FOR HDTV

Use our "**Perfect Device Matching Tool**" to create a custom setup guide based on your TV and devices. Scan QR code or visit bit.ly/device-matching-tool

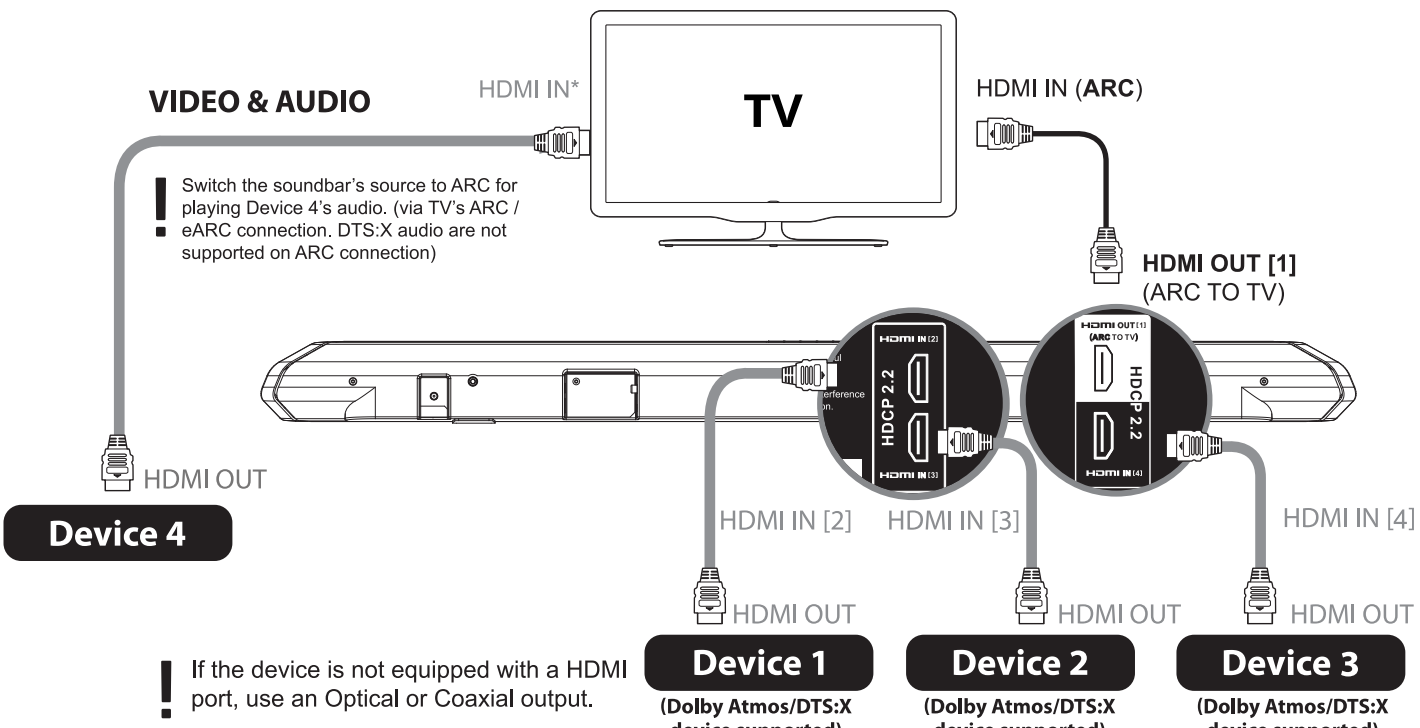

7 CONNECTING YOUR CONTENT DEVICES (CONT.)

ADVANCED SETUP - FOUR-DEVICE SETUP FOR TV WITHOUT HDMI ARC

Use our "Perfect Device Matching Tool" to create a custom setup guide based on your TV and devices. Scan QR code or visit bit.ly/device-matching-tool

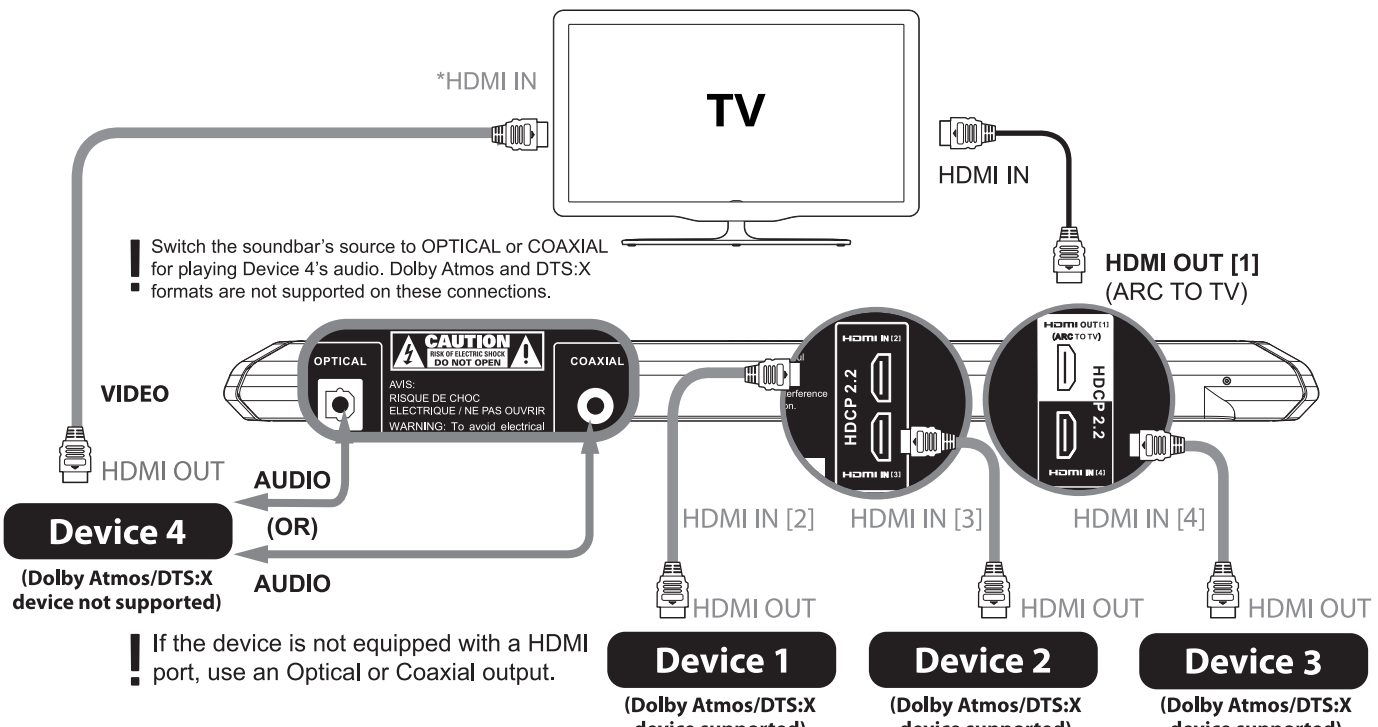

7 CONNECTING YOUR CONTENT DEVICES

CONNECTIONS CENTRAL - RECOMMENDED CONNECTION BASED ON DEVICES

If you are using Optical connection option, connect all your content devices to TV.

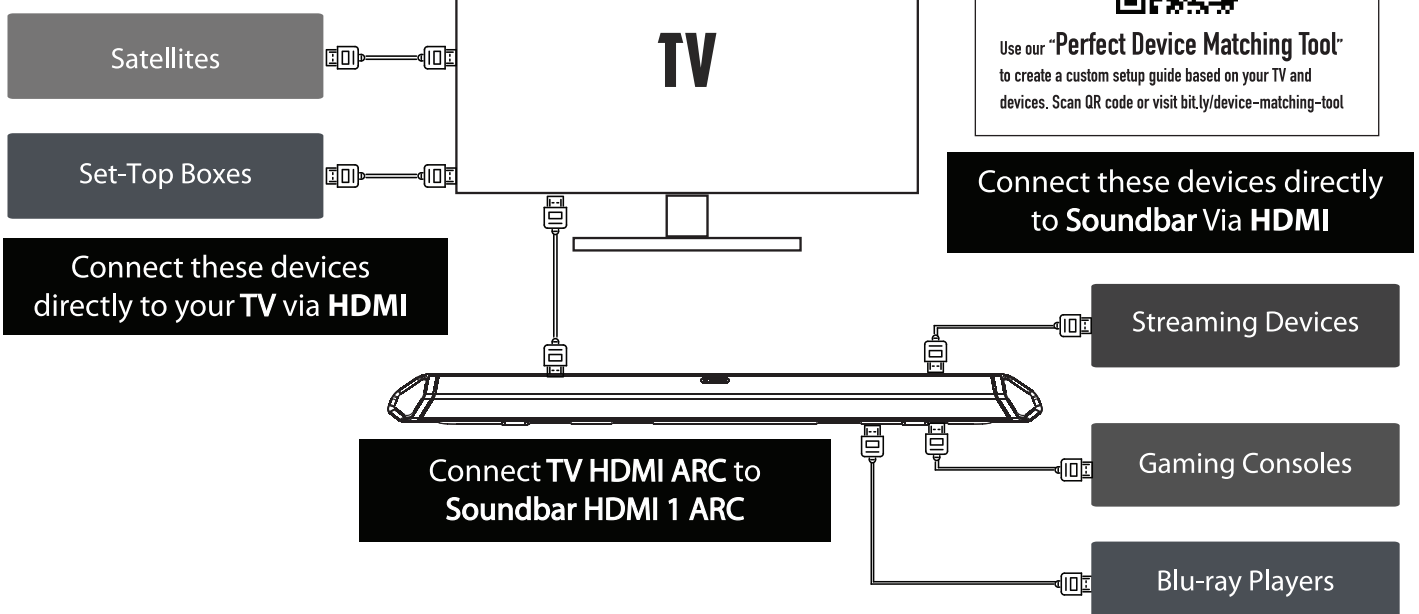

8 SETTING UP YOUR CONTENT DEVICES

RECOMMENDED AUDIO SETTINGS FOR BEST AUDIO

Use our "Perfect Device Matching Tool" to create a custom setup guide based on your TV and devices. Scan QR code or visit bit.ly/device-matching-tool

APPLE TV® 4K (5th Gen)
Setting Audio Output:
Settings > Video and Audio > Audio > Audio Output > select ***HDMI***
Setting Audio Format:
Settings > Video and Audio > Audio >
1. Audio Mode > select ***Auto***
2. Reduced Loud Sounds > select ***OFF***
3. Audio Format >
   A. Change Format > select ***OFF***
   B. Dolby Atmos > select ***ON***

APPLE TV® (4th Gen)
Setting Audio Output:
Settings > Video and Audio > Audio > Audio Output > select ***Apple TV***
Setting Audio Format:
Settings > Video and Audio > Audio > Surround Sound > select ***Dolby Digital 5.1***

AMAZON FIRE® TV CUBE / FIRE® TV 4K
Settings > Display & Sounds > Audio > ***select Dolby Digital Plus over HDMI***
NOTE: When plugging Fire TV 4K directly to TV, set TV audio's digital output format > select ***Dolby Digital***

ROKU™ ULTRA 4K / ROKU™ 4 / ROKU™ 3
Setting Audio Format:
Roku Ultra 4K: Settings > Sound > HDMI > select ***Dolby D+, DTS*** (Required for Netflix, Amazon and Hulu streaming)
Roku 4 and 3: Settings > Audio > Audio Mode > select ***DD/DTS***

ROKU™ MEDIA STICK
Recommended Setup: Connect the device directly to TV via HDMI port and send out audio to soundbar via ARC
Setting Audio Format:
1. ROKU Audio Settings: Settings > Sound > HDMI > select ***Dolby D+, DTS*** (Required for Netflix, Amazon and Hulu streaming)
2. TV Audio Settings: Digital Output Format > select ***Dolby Digital***

NVIDIA® SHIELD
Setting Audio Format:
1. Nvidia Shield Audio Settings: Settings > Display & Sound > Other > Advanced Settings >
   a. Stereo Upmix > turn ***On*** (For 2015 model only)
   b. HDMI 5.1 Audio > turn ***On*** (For 2017 model only)

PLAYSTATION® 4 PRO
Setting Audio Output:
Settings > Sound and Screen > Audio Output Settings > Primary Output Port > select ***HDMI Out*** (Uncheck Output 5.1ch Audio box to allow 7.1ch Audio output)
Setting Audio Format:
1. System Level Audio Settings:
   Settings > Sound and Screen > Audio Output Settings > Audio Format (Priority) > select ***Dolby Digital*** (Best for Netflix streaming)
2. Blu-ray Player Audio Settings: (Available when playing Blu-ray disc)
   Press Option button on controller > Settings > audio format > select ***Bitstream (Direct)***

XBOX® ONE X
Setting Audio Format:
1. System Level Audio Settings:
   System > Settings > Display & Sound > Audio Output > Speaker Audio >
   a. HDMI Audio > select ***Bitstream Out***
   b. Bitstream Format > select ***Dolby Atmos for Home Theater***
2. Blu-ray Playback Audio Settings:
   Settings > Disc & Blu-ray > Blu-ray >
   a. Let my receiver decode audio > ***Enable*** (Check the box)
   b. Pass Blu-ray audio directly to your receiver? > select ***Pass audio to receiver***

NINTENDO® SWITCH
Recommended Setup: Connect the device directly to TV via HDMI port and send out audio to soundbar via ARC
Setting Audio Format: (Put the console in TV mode)
1. SWITCH Audio Settings:System Settings > TV Settings > TV Sound > ***Automatic***
2. TV Audio Settings: Digital Output Format > select ***Dolby Digital***

SAMSUNG BLU-RAY™ PLAYER
Setting Audio Output:
Settings > Sound > Sound Output > select **HDMI Audio**
Setting Audio Format:
Settings > Sound > Audio Output Format > select **Bitstream (Unprocessed)**

SONY® BLU-RAY™ PLAYER
Setting Audio Output:
Setup > System Settings > HDMI Audio Output > select **Auto**
Setting Audio Format:
Setup > Audio Settings >
1. Digital Audio Output > select **Auto**
2. DSD Output Mode > select **Off**
3. BD Audio MIX Setting > select **Off**
4. DTS Neo:6 > select **Off**
5. DSEE HX > select **Off**
6. Downmix > select **Surround**

DISH® Satellite TV SET-TOP BOX
1. Launch System Settings
2. Set Decoder to **Dolby Digital**
3. Set Mode to **Line**
4. Select **Done**

Xfinity® SET-TOP BOX
A) Go to **Setting**
B) Select **Audio Codec**
C) Select **HDMI** or **Optical**
D) Set Audio Range to **Normal**
E) Set Audio Output to **Fixed**

Above is the recommended audio settings for a list of popular devices. For full list of devices with our recommended audio settings, visit nakamichi-usa.com/best-sound or scan QR code on the right.

If your device is not listed on our website, please refer to its own user manual.

REMOTE CONTROL OVERVIEW

For expanded remote control guide, scan QR code or visit:
bit.ly/92-shockwafe-remote

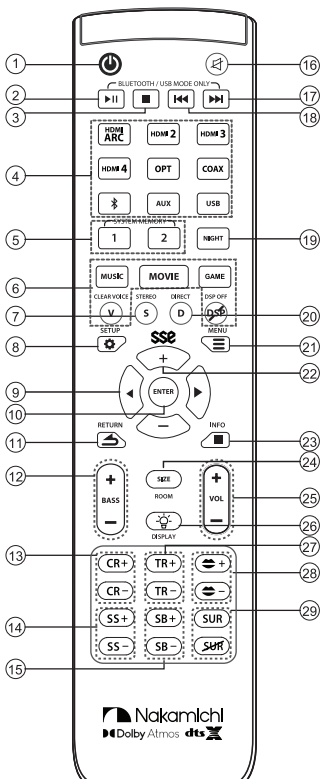

① **POWER*** ⏻
Turn ON/OFF the soundbar

② **PLAY/PAUSE** ▶II
Play/pause audio playback (Bluetooth/USB mode only)

③ **STOP** ■
Stop audio playback (Bluetooth/USB mode only)

④ **INPUT SOURCE**
Select an audio input source (See page 24 for more details)

⑤ **SYSTEM MEMORY**
Save your personalized audio settings
(See page 32 for details)

⑥ **EQ (EQUALIZER)**
Select different audio equalization presets
(See page 25 for details)

⑦ **STEREO ONLY**
Activate All Channel Stereo or Stereo Only

⑧ **SETUP** ⚙
Access to advanced system settings
(HDMI ARC/2/3/4 mode only, see page 26)

⑨ **◀ / ▶ BUTTON**
Toggle different settings (SETUP/MENU function only)

⑩ **ENTER BUTTON**
Select desired settings (SETUP/MENU function only)

⑪ **RETURN** ⮌
Return to the previous selection (SETUP/MENU function only)

⑫ **BASS + / -**
Adjust the bass level

⑬ **CENTER + / -**
Adjust the center channel level

⑭ **SS + / - (SURROUND SIDE)**
Adjust the volume of both side surround channels

⑮ **SB + / - (SURROUND BACK)**
Adjust the volume of both back surround channels

⑯ **MUTE** 🔇
Mute/unmute the soundbar

⑰ **NEXT** ⏭
Skip to the next track (Bluetooth/USB mode only)

⑱ **PREVIOUS** ⏮
Return to the previous track (Bluetooth/USB mode only)

⑲ **NIGHT**
Normalize volume for night time listening
(Dolby/DTS:X audio only, see page 25 for details)

⑳ **DIRECT**
Select different channel mapping/upmixing methods
(See page 27 for details)

㉑ **MENU** ☰
Access to Firmware upgrade and wireless subwoofer pairing (USB mode only, see page 28 for details)

㉒ **SSE + / -**
(SPATIAL SURROUND ELEVATION PROCESSING)
Select different SSE modes (See page 29 for details)

㉓ **INFO** ■
Display system information on the soundbar LED display
(See page 30 for details)

㉔ **ROOM SIZE**
Select a pre-defined optimized room size
(See page 31 for details)

㉕ **VOL + / - (VOLUME)**
Adjust the master volume of the soundbar

㉖ **LED DISPLAY** ☼
Select between 3 pre-defined brightness for the front LED Display. (DIM 0 = Display light will shut off automatically)

㉗ **TR + / - (TREBLE)**
Adjust the high tones (treble) level

㉘ **⏏ + / - (LIP SYNC)**
Adjust the deviations in timing between audio and video playback (HDMI 1 to 4, Optical or Coaxial input only, see page 42 for details)

㉙ **SUR (SURROUND ON/OFF)**
SUR: 9.2 surround sound
~~**SUR**~~: Surround speakers will be disabled

* If HDMI CEC is connected between TV and soundbar, always use the TV or source device's power button on the remote to power "ON" the system. Always use the TV power button to power "OFF" the system.

SELECTING DIFFERENT INPUT SOURCES ON YOUR REMOTE

Press source buttons to select an audio input source.
Each input source will be displayed on the soundbar's front LED display.

For expanded remote control guide, scan QR code or visit:
bit.ly/92-shockwafe-remote

Button	5 LED DIGITS on Soundbar
HDMI ARC	ARC
HDMI 2	HDMI2
HDMI 3	HDMI3
HDMI 4	HDMI4
OPT (OPTICAL)	OPT
COAX (COAXIAL)	COAX
BLUETOOH	BT
AUX	AUX
USB	USB

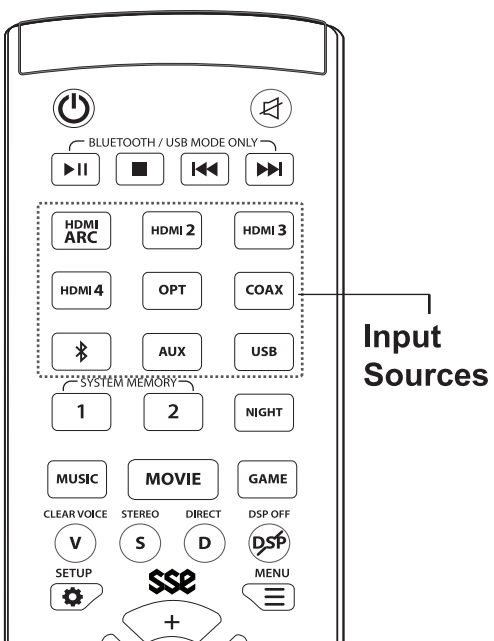

ACCESSING AUDIO PRESETS ON YOUR REMOTE

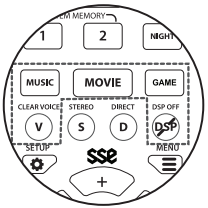

For expanded remote control guide, scan QR code or visit:
bit.ly/92-shockwafe-remote

EQ (EQUALIZER)

Press the EQ buttons on your remote to select your desired EQ settings for your preference. The system will remember the last setting.

MUSIC	MUSIC	Creates the acoustic environment of your music and makes you feel like you are seated in front of the stage.
MOVIE	MOVIE	Reproduces the thrilling environment and takes you to the center of the action. Feel the dynamic excitement.
GAME	GAME	Reproduces sound field effects for all game genres and adds depth and spaciousness to your game's surround sound
	NEWS	Makes you feel like you are in the front row of a live talk show. Hear crystal clear dialog.
	SPORTS	Reproduces the energetic environment of live sports broadcasts. Place the commentator's voice center stage and lets the sounds that fill the stadium surround you.
CLEAR VOICE	CLEAR VOICE	Enhances the clarity of dialog playback.
DSP OFF	DSP OFF	Audio playback without using any pre-defined Nakamichi EQ settings.

MUSIC	MUSIC
MOVIE	MOVIE
GAME	GAME
NEWS	NEWS
SPORTS	SPRTS
CLEAR VOICE	CLEAR VOICE
DSP OFF	DSP OFF

NIGHT MODE

Night mode feature normalizes the overall volume to avoid sudden changes in loudness. This feature is available with DTS:X and DOLBY contents on HDMI, HDMI ARC, Optical and Coaxial inputs.

NIGHT	OFF (default)	Volume normalization OFF. Maximum audio impact on video content.
	50%	50% of volume normalization
	100%	100% of volume normalization, recommended for night time listening
	AUTO	Contextual adaptive volume normalization to retain audio dynamism during normalization (For DOLBY content only)

DRC OFF	DRC OFF
DRC 50%	DRC 50
DRC 100%	DRC 100
DRC AUTO	DRC AUTO

ACCESSING ADVANCED SYSTEM SETTINGS ON YOUR REMOTE (ONLY ACCESSIBLE ON HDMI ARC/2/3/4 MODE)

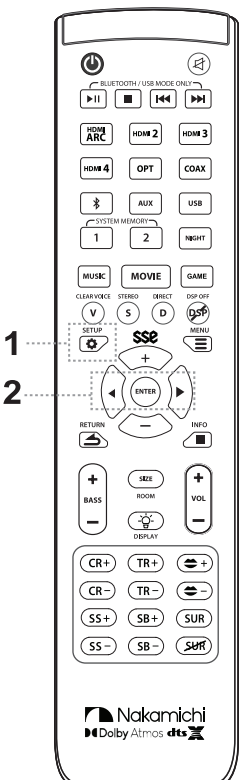

To use SETUP function, **switch to HDMI ARC/2/3/4** input. SETUP function applies to all input sources.

1. **Press the SETUP (⚙) button to cycle through different system settings.**

→ DRC → ECO → CROSS → RSURR →
← RESET ← D FRQ ← DIALG ← CEC-OTP* ← LSURR ←

2. **Press ENTER to select desired function for adjustment.**

3. **Available actions:**

a. Press ◂/▸ button to change the SELECTION value.*

* To select different settings or exit the SETUP function:
a. Press RETURN button to quit the current action and back to SETUP list to select different settings.
b. Press SETUP button to exit SETUP function

4. **Press ENTER button to save your settings value.**

* **CEC-OTP: HDMI-CEC ONE TOUCH PLAY** is a HDMI function on the soundbar that automatically switches between HDMI sources. (e.g. auto switch to ARC mode when a TV is powered on). By turning OFF the One Touch Play, you can manually select the input sources by using soundbar remote or Harmony universal remotes.

Function	SELECTION	OPTIONS
DTS:X & DOLBY Dynamic Range Compression (DRC)*	DRC (Default OFF)	OFF
		50%
		100%
		AUTO
Power Saving*	ECO (Default ON)	OFF
		ON
Subwoofer Crossover Frequency*	CROSS (Default 180HZ)	110HZ
		140HZ
		180HZ
Volume Balance for RIGHT Surround and Rear Speakers	RSURR (Default 00)	-3 to +3
Volume Balance for LEFT Surround and Rear Speakers	LSURR (Default 00)	-3 to +3
HDMI-CEC: One Touch Play	CEC-OTP (Default ON)	OFF
		ON
DTS:X Dialog Control* (For DTS:X content only)	DIALG (Default +3)	DIA+1 to DIA+6
Dedicated Frequency (D FRQ)	ON	DF ON**
	OFF	DF OFF (Default)
Factory Reset (System will restart when selecting YES)	RESET	YES
		NO

* see page 42 for more information. ** see page 38 for more information

ACCESSING CHANNEL MAPPING/UPMIXING ON YOUR REMOTE

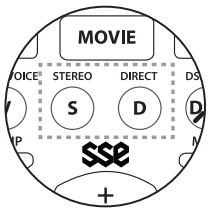

CHANNEL MAPPING

Channel mapping/upmixing is essential because most content is not recorded in 9.2 channels. The soundbar utilizes different channel mapping methods to optimize your listening experience. Dolby & DTS encode their own content with their respective proprietary upmixers to optimize surround performance.

Dolby Upmixing (Available for Dolby and PCM contents)

DIRECT	NATIVE	Direct decode 2.1/5.1/7.1 channel audio (No audio upmixing). Best for music and Bluetooth.
	DOLBY UPMIX	Dolby technology upmixes audio content to all audio channels.
	DOLBY SURR (DEFAULT)	Dolby technology upmixes audio content to all audio channels with vertical surround effects. (see page 41 for details)

NATIVE	NATIVE
DOLBY UPMIX	DOLBY UPMIX
DOLBY SURROUND	DOLBY SURR

DTS Upmixing (Available for DTS content only)

DIRECT	NATIVE	Direct decode 2.1/5.1/7.1 channel audio (No audio upmixing). Best for music and Bluetooth.
	DTS DIRECT	System DSP upmixes audio content to all audio channels.
	NEURAL:X (DEFAULT)	DTS technology upmixes audio content to all audio channels. Set to NEURAL:X to receive audio from all rear speakers. (see page 41 for details)

NATIVE	NATIVE
DTS DIRECT	DTS DIRECT
NEURAL: X	NEURAL X

ALL CHANNEL STEREO / STEREO ONLY Mode*

ALLCH STEREO	DTS, DOLBY & PCM	Enables 3 channel (Left, Center, Right) playback on the soundbar. Front channels are upmixed and outputted to surround speakers.
STEREO ONLY	DTS	Enables 2-channels stereo playback using the right front and left front channels. It down-mixes DTS multi-channel signals to 2 Channels.
	DOLBY & PCM	Enables 3-channels (Left, Center, Right) playback using the right front, center and left front channels. It down-mixes Dolby & PCM multi-channel signals to 3 Channels.

ALL CH STEREO	ALLCH STEREO
STEREO ONLY	STEREO ONLY

Note: For Bluetooth input, ALL CH STEREO mode will be turned ON by default.
* Available on FW34 firmware only. See page 37 for instructions on checking firmware version and upgrading.

ACCESSING MENU FUNCTIONS ON YOUR REMOTE
(ONLY ACCESSIBLE ON USB MODE)

For expanded remote control guide, scan QR code or visit:
bit.ly/92-shockwafe-remote

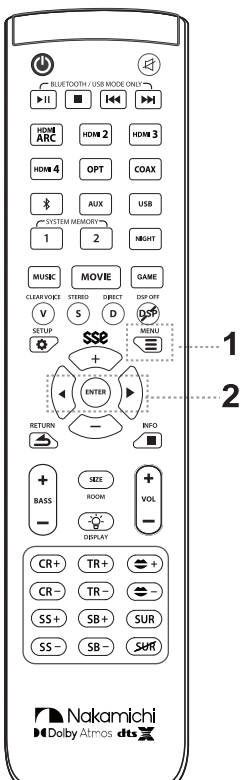

To use MENU function, please switch to **USB** input.

Navigating the MENU SELECTION:

1. **Press the MENU (≡) button cycle through different function (FWUPG -> SUB PAIR)**

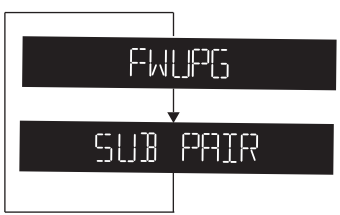

MENU	SELECTION	FUNCTIONS
FIRMWARE UPGRADE (See page 37 for details)	FWUPG	UPGRADING
		DONE
		FAIL
WIRELESS SUBWOOFER PAIRING (See page 34 for details)	SUB PAIR	PAIRING
		DONE
		FAIL

2. **Available actions:**

a. Press ◂/▸ button to change the SELECTION FUNCTIONS
b. Press ENTER to select desired function.
c. Press RETURN (⏎) button to quit the current action and back to MENU (≡) list to select different function
d. Press MENU (≡) button to exit MENU (≡) function

3. **Press ENTER to confirm**

ACCESSING SSE MODE ON YOUR REMOTE

SPATIAL SURROUND ELEVATION (SSE) MODE

Shockwafe Ultra 9.2 SSE is embedded with 3 proprietary advanced processing engines that unlock 360-degree 9.2.4ch surround.

(SSE OFF = No vertical surround effects)

WHAT IS SSE PROCESSING?

SPATIAL

Performs spatial-amplification techniques to unlock extra details, enhance directionality and enlarge spaciousness of the surround sound experience

SURROUND

Executes upmixing, phase and volume improvements to optimize the clarity and balance of the surround sound across all channels, delivering up to 9.2.4 channels

ELEVATION

Enables the processing of all the latest 3D object-based content, including Dolby Atmos, and interlaces a height effects sound layer

SSE 1

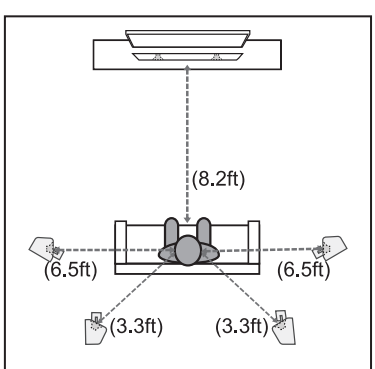

SSE 2

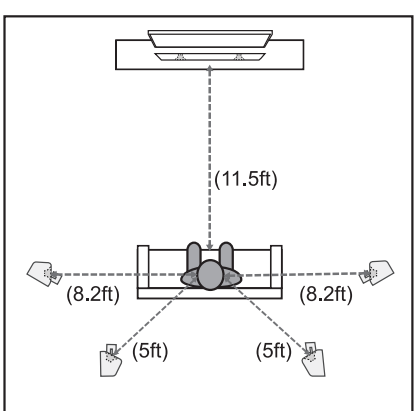

SSE 3

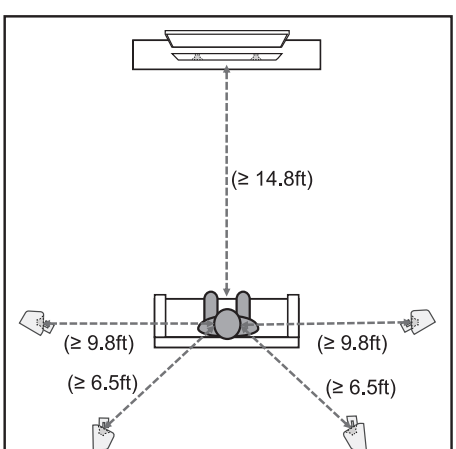

ACCESSING INFO ON YOUR REMOTE

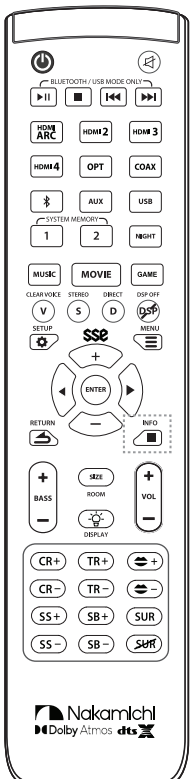

Press INFO button to view system settings on the soundbar's front LED display

AUDIO FORMAT
(DOLBY ATMOS TRUEHD, DOLBY ATMOS D PLUS, DOLBY TRUEHD, DOLBY ATMOS MAT**, DOLBY D PLUS, DOLBY DIGITAL, DTS X, DTS-HD MA, DTS HD, DTS DIGITAL, LPCM 7.1, LPCM 5.1, PCM 2.0)

↓

UPMIXING / DOWNMIXING FORMAT
(ALLCH STEREO, STEREO ONLY, DOLBY SURR, DOLBY UPMIX, NEURAL X, DTS DIRECT, NATIVE)

↓

EQ MODE
(MOVIE, MUSIC, GAME, NEWS, SPRTS, CLEAR VOICE or DSP OFF)

↓

VOLUME
(VOL00 to MAX)

↓

SSE MODE
(SSE OFF, SSE 1, SSE 2, SSE 3)
Note: When ALLCH STEREO / STEREO ONLY is selected, SSE Mode is disabled

↓

BASS LEVEL
(B 01 to B 10)

↓

CENTER LEVEL
(CR 01 to CR 10)

↓

TREBLE LEVEL
(TR 01 to TR 10)

↓

SURROUND LEFT & RIGHT CHANNELS LEVEL
(SS 01 to SS 10)

↑

SURROUND BACK LEFT & RIGHT CHANNELS LEVEL
(SB 01 to SB 10)

↑

SURROUND RIGHT OVERALL BALANCE
(R-3 to R+3)

↑

SURROUND LEFT OVERALL BALANCE
(L-3 to L+3)

↑

CROSSOVER FREQUENCY
(180HZ, 140HZ, 110HZ)

↑

NIGHT MODE / DYNAMIC RANGE CONTROL
(DRC OFF, DRC 50%, DRC 100%, DRC AUTO)

↑

HDMI-CEC ONE TOUCH PLAY
(CEC-OTP ON, CEC-OTP OFF)

↑

DTS:X DIALOG CONTROL
(DIA+1 to DIA+6)

↑

ECO MODE
(ECO ON, ECO OFF)

↑

DEDICATED FREQUENCY
(DF ON, DF OFF)

↑

FIRMWARE VERSION
(FWXX, XX=FIRMWARE VERSION)

** **Xbox One X/S and Apple TV 4K** come with a Dolby Atmos MAT encoder, which is designed to encode, decode and incorporate Dolby Atmos metadata into lossless pulse-code modulation (PCM) audio, allowing listeners to experience Dolby Atmos even in PCM audio.

ACCESSING ROOM SIZE ON YOUR REMOTE

For instant surround optimization to Small, Medium and Large rooms, there are 3 pre-tuned acoustic configurations.

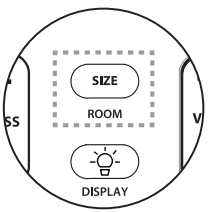

Room Size	Small	Medium (Average)	Large
Square feet	196	324	484 or more
Room dimension: Length x Width (feet)	14 x 14	18 x 18	22 x 22 or bigger

LARGE ROOM

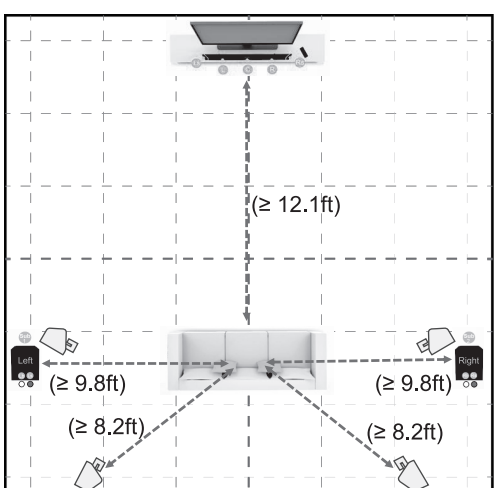

MEDIUM ROOM

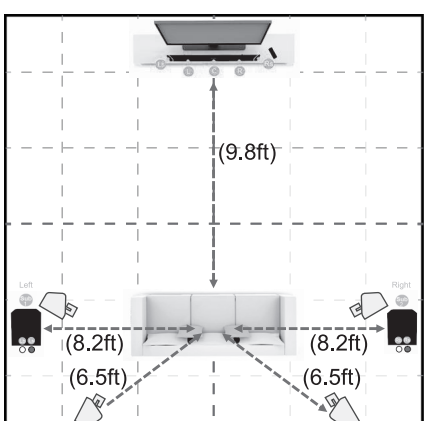

SMALL ROOM

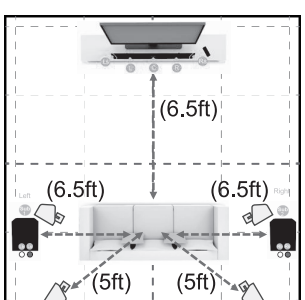

SAVING AUDIO SETTINGS TO SYSTEM MEMORY

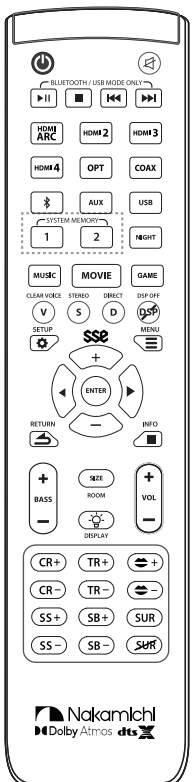

Two sets of audio settings can be saved onto the soundbar's memory, allowing quick access to your audio preferences.

FUNCTION	BUTTON	5 LED DIGITS ON SOUNDBAR
SYSTEM MEMORY	Customized Memory 1 Long press to SAVE1	SAVE1
	Once saved, show M1SET	M1SET
	Customized Memory 2 Long press to SAVE2	SAVE2
	Once saved, show M2SET	M2SET

Saving settings to system memory:

1. Hold down the SYSTEM MEMORY 1 or 2 button until “SAVE1” or “SAVE2”, corresponding to the button pressed, is displayed on LED.

2. When the SYSTEM MEMORY 1 or 2 settings are saved, “M1SET” or “M2SET” is displayed.

If system settings are already stored in the selected memory 1 or 2, the system overwrites the old settings.

Loading settings

1. Press the SYSTEM MEMORY 1 or 2 button once and the corresponding settings will be loaded. If the SYSTEM MEMORY 1 button is pressed, “M1” will be displayed.

The following audio settings can be saved to system memory:

a) EQ mode
b) Volume
c) Bass
d) Treble
e) Center
f) Surround L&R
g) Surround Back L&R

WIRELESS BLUETOOTH AUDIO STREAMING

BLUETOOTH 4.1 WITH APTX

Stream music wirelessly from your mobile device via Bluetooth (BT) with aptX. BT audio transmission is often compressed using bit-rate reduction. Qualcomm aptX audio technology uses larger transmission bandwidth to allow higher resolution audio streaming, reproducing pure sound as good as wired connection.

Maximizing Signal

A Bluetooth signal has a range of up to 30 feet.
If you hear any break-up or disconnect while streaming music from your device, move the source device closer to the soundbar.

Note: Soundbar will be switched to ALL CHANNEL STEREO in Bluetooth mode.

Your soundbar is not equipped with a microphone, so it cannot operate as a hands-free device for a smartphone.

Reduce the volume levels on your device and on the soundbar before pressing Play. High volume levels can damage your hearing.

BLUETOOTH PAIRING

To pair the soundbar with a Bluetooth device:

1. Set your Bluetooth device into Bluetooth pairing mode (discoverable)
2. Press and hold the Bluetooth (ᛒ) button on the remote control until the LED display on the soundbar shows “BT” blinking.
3. You can now search for the soundbar (SHOCKWAFE) using your Bluetooth device. For more information, refer to the user documentation of your device.
4. Play audio from your Bluetooth device. Volume can be controlled on your source device or soundbar remote control.

Note: If the soundbar detects a Bluetooth device that was previously connected, the soundbar will automatically connect to the Bluetooth device after Step 2

To disconnect the soundbar with a paired Bluetooth device:

1. Press and hold down the Bluetooth (ᛒ) button on the remote control until the LED display on the soundbar shows “BT” blinking.
2. The soundbar is ready to pair with a new device.

RE-LINKING THE SUBWOOFERS WITH THE SOUNDBAR

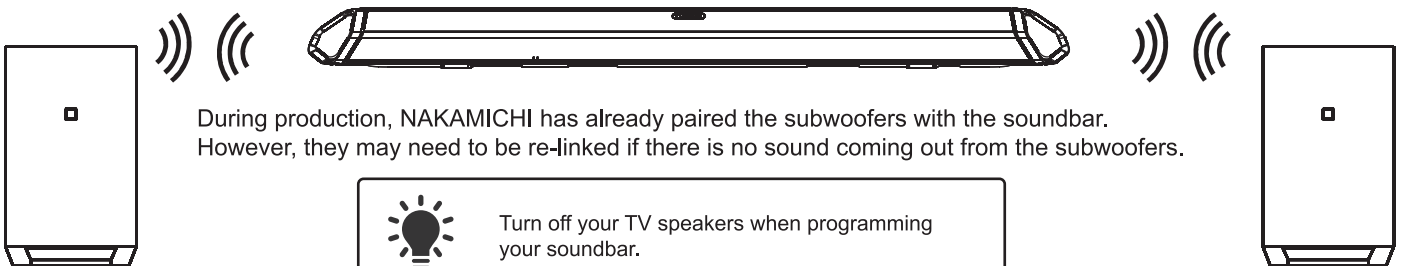

During production, NAKAMICHI has already paired the subwoofers with the soundbar.
However, they may need to be re-linked if there is no sound coming out from the subwoofers.

Turn off your TV speakers when programming your soundbar.

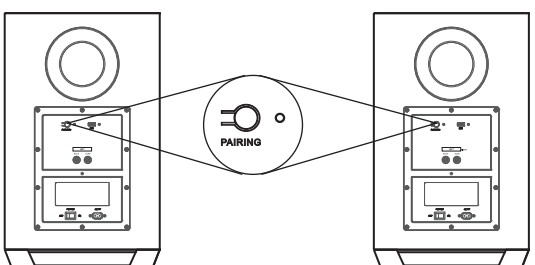

1. Ensure the soundbar and two subwoofers are powered OFF
2. Power ON the LEFT subwoofer
3. Power ON the RIGHT subwoofer
4. Press and hold PAIRING button at the back of LEFT subwoofer until the BLUE LED light start blinking rapidly
5. Press and hold PAIRING button at the back of RIGHT subwoofer until the BLUE LED light start blinking rapidly
6. Power ON the soundbar
7. Pair the soundbar to the subwoofer in 2 ways:
   a. On the remote control
      i. Press the USB button on remote control to USB mode
      ii. Press the menu button and toggle to SUB PAIR option
      iii. Press ENTER and the “PAIR-” will be shown on LED display
   b. On the soundbar
      i. Press the ⏎ button on the soundbar to toggle USB mode
      ii. Press and hold the DEMO button until “PAIR-” is shown on LED display.
8. The soundbar is in subwoofer pairing mode (LED display: “PAIR-”)
9. Once the linking process is completed, the soundbar’s LED display will show “DONE” and the Blue LED at the back of both subwoofers will stay lit constantly

Note: Once soundbar is powered off, the blue LED lights on the subwoofers will continue blinking for 10 minutes before going into standby mode.

WALL-MOUNTING YOUR SOUNDBAR SYSTEM

SOUNDBAR

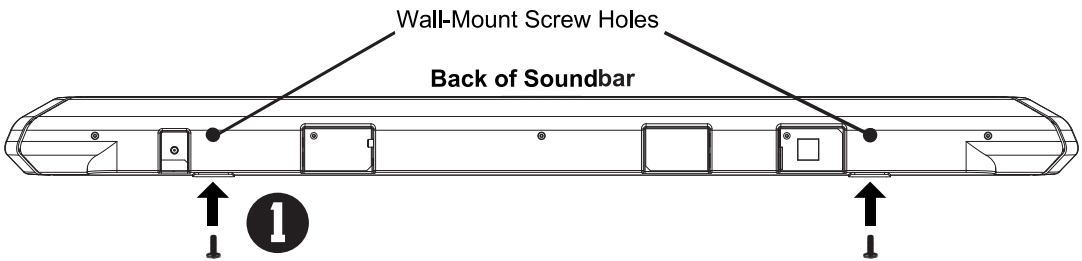

1. Insert the 2 mounting screws into the wall-mount screw holes, and then tighten them.

2. Place the included wall-mounting template against the wall under your TV. Mark the 4 bracket holes using a pencil.

3. Be sure your screws are attached to wood studs, drywall anchors (for drywall), or concrete anchors (for brick/concrete walls).

   Choose the screw type and length appropriate to your home's construction. If in doubt, consult a professional installer.

> If you are unfamiliar with power tools or the layout of electrical wiring in the walls of your home, consult a professional installer.

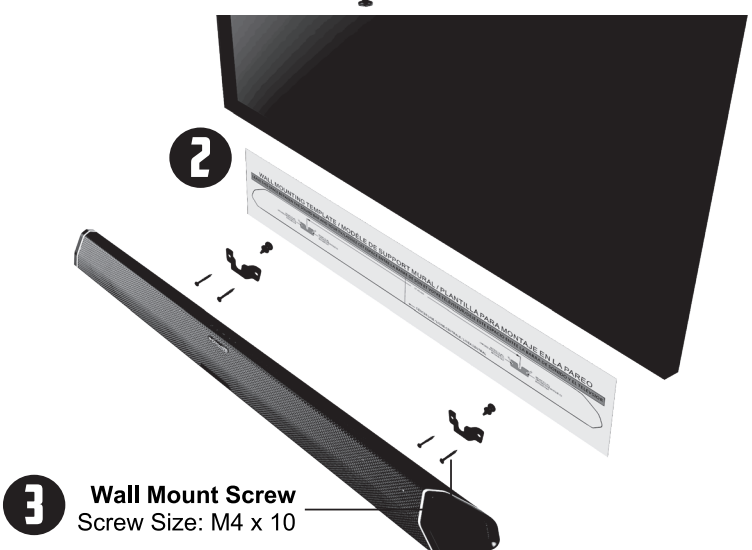

WALL-MOUNTING YOUR SOUNDBAR SYSTEM (CONT.)

SURROUND SPEAKERS

To wall-mount the satellite speakers:

1. Attach the mounting screws to the back of the satellite speaker.
2. Align and mount the satellite speaker with the wall mount bracket.

! Be sure your screws are attached to wood studs or drywall anchors (for drywall) or concrete anchors (for brick/concrete walls). Wall mounting tools are not included.

If you are unfamiliar with power tools or the layout of electrical wiring in the walls of your home, consult a professional installer.

BEST: Detached

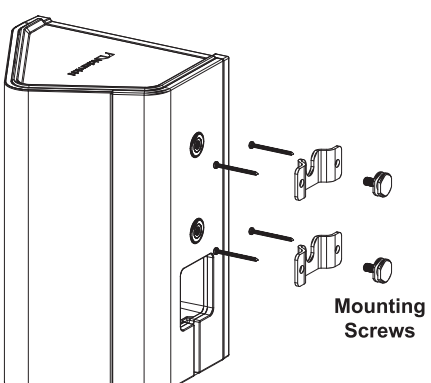

BETTER: Attached

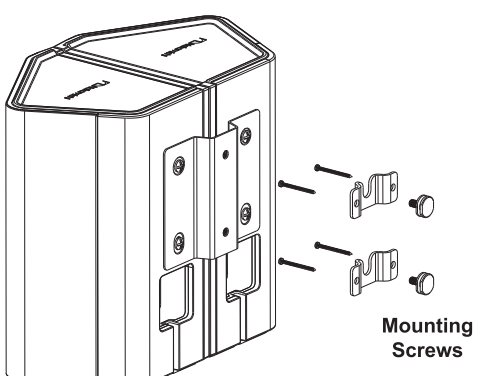

FIRMWARE UPGRADE

Firmware upgrades that provide additional features and performance improvements are released occasionally.
For more information, visit **nakamichi-usa.com/92-sse-firmware**

Do not perform this procedure unless firmware upgrade is necessary. Be sure to read the information supplied with the firmware before upgrading the firmware.

CHECKING THE FIRMWARE VERSION:
On the remote control toggle the INFO button until the LED display “FWXX”. The firmware version will be displayed.

SOUNDBAR FIRMWARE UPGRADE

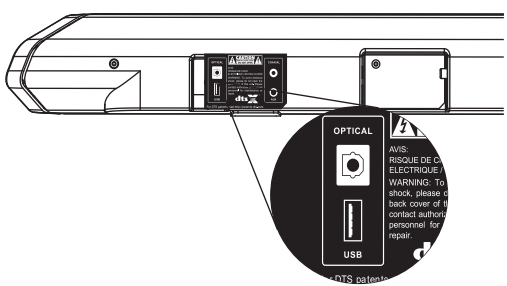

1. Insert the USB stick with the unzipped firmware file (.BIN format) into the soundbar's USB port
2. Press the USB button on the remote control to USB mode
3. Press MENU button to navigate firmware upgrade function (FWUPG on LED display)
4. Press and hold the ENTER button until "UPG--" is displayed on front LED display
5. Firmware upgrading process will be displayed on the LED screen
6. Once the firmware is completed, the soundbar will restart automatically

Firmware upgrade process **may take up to 5 to 10 minutes.** Update progress is displayed on the front panel display when the firmware is upgrading. During each upgrading stage, there will be a numeric percentage to show its progress.

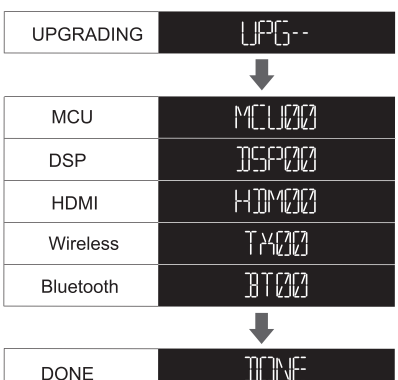

Once the firmware is completed, the soundbar will restart automatically to default factory settings.

If the soundbar detected the same firmware version installed, “FW UP TO DATE” will be displayed on the soundbar LED display.

HELP & TROUBLESHOOTING

For web support, visit https://bit.ly/nakamichi-faq or scan QR code

1. HDMI ARC/CEC - No Sound or Video

Performing a Soundbar Soft Reset can restore the soundbar settings back to factory default and refresh HDMI settings. If your TV's connected to another sound system via HDMI previously, perform a Soundbar & TV Hard Reset + HDMI Connection Refresh to establish a new HDMI handshake.

Soundbar Soft Reset:

1. Switch to **HDMI ARC** input
2. Press **SETUP** button multiple times to locate **RESET** function
3. Press **ENTER** button to select the function
4. Press **ENTER** button again to confirm **RESET** function
5. The soundbar will restart automatically to complete the reset sequence.

("HELLO" appears on soundbar LED and it will be back to **ARC** mode by default)

Soundbar & TV Hard Reset + HDMI Connection Refresh:

1. While all source devices are on, disconnect **all HDMI cables** connected to TV and soundbar as well as TV to soundbar
2. **Power OFF** TV, soundbar and all source devices
3. **Unplug all devices** from the AC outlets
4. **Wait for 5 minutes** before plugging the TV, soundbar and source devices back to the AC outlets
5. **Power ON** the soundbar, TV and all source devices
6. While they are on, **connect the TV and soundbar via HDMI ARC**. Once the connection is established, connect the source devices one at a time. Use Perfect Device Matching Tool on page 22 to create a customized setup guide based on your source devices

2. Subwoofer or Surround Speakers Cut Out / Crackling / Popping:

Enable dedicated frequency communication between the soundbar and the subwoofers & rear speakers.
(*Available on FW34 only)

1. Switch to any **HDMI ARC** input
2. Press **SETUP** button on the remote a few times until soundbar LED displays "**D FRQ**"
3. Use the **LEFT** or **RIGHT** arrow to select "**DF ON**"
4. Press **ENTER** button on the remote

If you are still having issues with your subwoofers, visit: **bit.ly/92-subwoofers-audio-distortion**. For other subwoofer related issues, visit: **bit.ly/92-dual-subwoofers-faq**

* To check for firmware version, press **INFO** button on the remote control multiple times until you see FWXX on the soundbar front LED panel.

3. The Soundbar or the Subwoofer Does Not Power On

Please contact **support@nakamichi-usa.com** so we can work on a replacement (within 30 days of purchase). The system comes with a **1 year parts and labor warranty.**

4. No Sound from Surround Speakers

Press the **"DIRECT"** or **"STEREO"** buttons on the remote to enable Dolby Surround, Dolby Upmix or All Channel Stereo to get sound from all speakers

5. Low Volume from Surround Speakers

Press the **"STEREO"** button on the remote to enable All Chanel Stereo for maximum surround speakers output. Best for YouTube™ and music.

SPECIFICATIONS

SOUNDBAR
6 x 2.5" Full Range Driver
2 x 1" High Frequency Tweeter

SURROUND LEFT & RIGHT
1 x 3" Full Range Driver (Each side)
1 x 1" High Frequency Tweeter (Each side)

SURROUND BACK LEFT & RIGHT
1 x 3" Full Range Driver (Each side)
1 x 1" High Frequency Tweeter (Each side)

WIRELESS LEFT & RIGHT SUBWOOFERS
1 x 10" Down Firing Driver (Each side)

CONNECTIVITY
HDMI (Dolby Vision & 4K HDR Pass-Thru)
HDMI Out (ARC to TV) x 1 [HDCP 2.2]
HDMI Input x 3 [HDCP 2.2]

DIGITAL AUDIO
OPTICAL Input x 1
COAXIAL Input x 1

Analog AUX Audio Input x 1
BLUETOOTH 4.1, with aptX
USB x 1

PERFORMANCE
Channels: 9.2
Sound Pressure Level SPL: 110 dB
Total Power: 1000W
Power Output:
330W (Soundbar)
100W (Surround Left & Right)
100W (Surround Back Left & Right)
470W (Subwoofer)
Frequency Response: 30Hz – 22kHz

AUDIO PROCESSING
Dolby Atmos, Dolby TrueHD, Dolby Atmos MAT, Dolby Digital Plus, Dolby Digital, DTS:X, DTS-HD Master Audio, DTS-HD High Resolution Audio, DTS Digital Surround

REMOTE CONTROL
52-Key Backlit LED
7 EQ Modes – Movie, Music, Sports, News, Game, Clear Voice, Night

DIMENSIONS, WEIGHT & POWER RATING
Soundbar: 45.5 x 3.3 x 3.0 Inches, 7.27 lbs.
Subwoofer: 13.5 x 12 x 20.5 Inches, 23.4 lbs. (Each)
Satellite Speaker: 5.0 x 5.4 x 8 Inches, 2.8 lbs. (Each)
Power Input:
Soundbar: 100 - 240V, 50/60 Hz
Subwoofer: 110 - 240V, 50/60 Hz

ONE YEAR LIMITED WARRANTY

LIMITED WARRANTY (U.S. Only)

Nakamichi LLC ("Nakamichi") warrants this product against defects in material or workmanship for the time periods and set forth below. Pursuant to this Limited Warranty, Nakamichi will, at its option, (i) repair the product using new or refurbished parts or (ii) replace the product with a new or refurbished product. For purposes of this Limited Warranty, "refurbished" means a product or part that has been returned to its original specifications. In the event of a defect, these are your exclusive remedies.

Labor: For a period of one (1) year from the original date of purchase of the product ("Labor Warranty"), Nakamichi will, at its option, repair or replace with new or refurbished product, product determined to be defective. If Nakamichi elects to replace the product after this Labor Warranty has expired but while the Parts Warranty below is still in effect, it will do so for the applicable labor charge.

Parts: For a period of one (1) year from the original date of purchase of product ("Parts Warranty"), Nakamichi will supply new or refurbished replacement parts in exchange for parts determined to be defective.

This Limited Warranty covers only the hardware components packaged with the Product. It does not cover technical assistance for hardware or software usage and it does not cover any software products whether or not contained in the Product; any such software is provided "AS IS" unless expressly provided for in any enclosed software Limited Warranty. Please refer to the End User License Agreements included with the Product for your rights and obligations with respect to the software.

Instructions: To obtain warranty service, you must deliver the product, **freight prepaid**, in either its original packaging or packaging affording an equal degree of protection to the Nakamichi authorized service facility specified. **It is your responsibility to backup any data, software or other materials you may have stored or preserved on your unit. It is likely that such data, software, or other materials will be lost or reformatted during service and Nakamichi will not be responsible for any such damage or loss.** A dated purchase receipt is required.

Repair / Replacement Warranty: This Limited Warranty shall apply to any repair, replacement part or replacement product for the remainder of the original Limited Warranty period or for ninety (90) days, whichever is longer. Any parts or product replaced under this Limited Warranty will become the property of Nakamichi.

This Limited Warranty only covers product issues caused by defects in material or workmanship during ordinary consumer use; it does not cover product issues caused by any other reason, including but not limited to product issues due to commercial use, acts of God, misuse, limitations of technology, or modification of or to any part of the Nakamichi product. This Limited Warranty does not cover Nakamichi products sold AS IS or WITH ALL FAULTS or consumables (such as fuses or batteries). This Limited Warranty is invalid if the factory-applied serial number has been altered or removed from the product.

This Limited Warranty is valid only in the United States. This Limited Warranty is valid only for Nakamichi products purchased from the following authorized retailers with a valid receipt stating date, product description and purchase price:
1. Amazon.com (under seller "Nakamichi LLC")
2. Best Buy
3. Ebay (under seller "nakamichi-usa")
4. B&H Photo Video

LIMITATION ON DAMAGES: NAKAMICHI SHALL NOT BE LIABLE FOR ANY INCIDENTAL OR CONSEQUENTIAL DAMAGES FOR BREACH OF ANY EXPRESS OR IMPLIED WARRANTY ON THIS PRODUCT.

DURATION OF IMPLIED WARRANTIES: EXCEPT TO THE EXTENT PROHIBITED BY APPLICABLE LAW, ANY IMPLIED WARRANTY OF MERCHANTABILITY OR FITNESS FOR A PARTICULAR PURPOSE ON THIS PRODUCT IS LIMITED IN DURATION TO THE DURATION OF THIS WARRANTY.

Some states do not allow the exclusion or limitation of incidental or consequential damages, or allow limitations on how long an implied warranty lasts, so the above limitations or exclusions may not apply to you. This Limited Warranty gives you specific legal rights any you may have other rights which vary from state to state.

CUSTOMER SUPPORT

Thank you for your purchase of this Product.
If you have any questions or comments, please visit our website at www.nakamichi-usa.com/faq or email us at **support@nakamichi-usa.com**
Phone Support: **(415) 805 6913** (Weekdays 10am - 7pm PST; Saturday, Holidays 10am - 5pm PST)

GLOSSARY

This section explains the technical terms used in this user manual.

Spatial Surround Elevation (SSE) Processing Technology
Nakamichi's proprietary processing technology: A set of processing algorithms that takes surround sound performance to a whole new level. For more info, visit nakamichi-usa.com/shockwafe-sse

Dolby Atmos object-based audio
Dolby Atmos is an object-based audio format with the capability to reproduce up to 128 simultaneous objects. Every sound in a scene can be represented as a separate audio object that can be positioned and moved throughout the 3D space.
For more information, visit https://www.dolby.com/us/en/brands/dolby-atmos.html

Dolby Vision
Dolby Vision transforms your TV experience with dramatic imaging with incredible brightness, contrast, color, details and dimensionality. And with the advanced capabilities in Dolby Vision, you'll see there's more to the story that generic HDR cannot reveal.

Dolby TrueHD
Dolby TrueHD is a lossless multi-channel audio codec developed by Dolby Laboratories which is used in home-entertainment equipment such as Blu-ray disc players and A/V receivers. It competes with DTS-HD Master Audio, a lossless codec from DTS.

Dolby Digital Plus
Dolby Digital Plus, also known as Enhanced AC-3 is a digital audio compression scheme developed by Dolby Labs for transport and storage of multi-channel digital audio. This format is commonly found on many streaming services, including Netflix, Amazon Prime, and more.

Dolby Digital
Dolby Digital is a compressed digital audio format developed by Dolby Laboratories, Inc. that supports 5.1-channel audio. This technology is used for audio on most DVD discs.

Dolby Surround
Dolby Surround expands on stereo to deliver sound from the sides, behind, and even above you, creating a natural, multidimensional sonic environment based on the science of how humans hear. Dolby audio in your home theater improves the power, clarity, and realism of sound by offering up to 7.1 discrete surround channels and up to 9.1 channels of sound with height dimension.

Dolby Upmix
Dolby Upmix expands on stereo to deliver sound all around you by offering up to 7.X discrete surround channels and up to 9.X channels of sound. It is designed to bring cinematic surround sound to your home.

DTS:X object-based audio
DTS:X uses a new technology called object-based audio that processes each sound contained in an audio source as an "object" and memorizes each object's sound changes and positional changes in a sound field to control these changes during playback. For more information, visit https://dts.com/dtsx

DTS-HD Master Audio
DTS-HD Master Audio is an advanced lossless audio format developed to offer a high-definition home theater experience by DTS, Inc. It is commonly found on Blu-ray discs and it can carry up to eight channels of 96 kHz/24-bit audio (up to six channels of 192 kHz/24-bit audio) simultaneously.

DTS-HD High Resolution Audio
DTS-HD High Resolution Audio is a compressed digital audio format that supports 7.1-channel and up to 96 kHz/24-bit audio. It remains fully compatible with the existing DTS multichannel audio systems.

DTS Digital Surround
DTS Digital Surround is a compressed digital audio format developed by DTS that supports 5.1-channel audio. This technology is used for audio on most DVD discs.

NEURAL:X
Neural:X is the latest down-mixing/up-mixing and spatial remapping technology from DTS. It is built in to DTS:X to provide upmix of Neural:X-encoded data. In DTS:X for soundbars, Neural:X can produce up to 11.x channels.

DTS:X Dialog Control
DTS:X Dialog Control allows you to boost the dialog, making the dialog more intelligible. People with impaired hearing may also benefit. Note that the content creator may disable the use of this feature in the mix, so that DTS:X Dialog Control may not always be available.

PCM (Pulse Code Modulation)
PCM is a signal format under which an analog audio signal is digitized, recorded, and transmitted. This is the basis of digital audio. Linear PCM is a lossless audio format sampled in a linear format, without any audio encoding. It provides the best audio compatibility among different devices.

Lip Sync
Video output sometimes lags behind audio output due to the complexity of signal processing caused by an increase in video signal capacity and internet streaming delay. Lip Sync is a technique to compensate the timing lag between audio and video output.

Dynamic Range Control (DRC)
DRC is an audio signal processing operation that reduces the volume of loud sounds or amplifies quiet sounds thus reducing or compressing an audio signal's dynamic range. This is also known as volume normalization.

Power Saving (ECO Mode)
Designed to prevent electrical wastage and promote eco-friendliness. ECO Mode automatically puts the system to standby mode when there is no signal detected for 20 minutes.

Subwoofer Crossover Frequency
The subwoofer crossover frequency is the frequency at which your speakers start to roll off and your subwoofer kicks in with low frequency effects and bass notes.

GLOSSARY

HDMI
HDMI (High-Definition Multimedia Interface) is the world-wide standard interface for digital audio/video signal transmission. This interface transmits both digital audio and digital video signals using a single cable without any loss. HDMI complies with HDCP (High-bandwidth Digital Content Protection) and provides a secure audio/video interface. For further information on HDMI, visit the HDMI website at "http://www.hdmi.org/".

HDMI-CEC CONTROL
HDMI-CEC Control allows you to operate external devices via HDMI. If you connect a TV that supports HDMI CEC control to the soundbar with an HDMI cable, you can control the soundbar (such as power and volume) with TV remote control operations.
Operation available from the TV's remote control:
- Standby synchronization.
- Volume control including mute.

HDCP
HDCP (High-bandwidth Digital Content Protection) is a digital copy protection form that prevents copying of digital contents as it travels across connections (such as HDMI).

What is aptX™?
Qualcomm® aptX™ audio technology enhances the wireless sound quality of many of the world's finest smartphones, speakers, headphones and tablets. Previously, these devices often had a reputation for providing average quality sound via Bluetooth, but with aptX, Bluetooth-enabled products can overcome that barrier and consistently deliver higher quality audio wirelessly.

The soundbar is compatible with the following audio formats:

Audio signal types	Audio signal formats	Compatible media
2ch Linear PCM	2ch, 32-192 kHz, 16/24 bit	CD, DVD-Video, DVD-Audio, etc.
Multi-ch Linear PCM	7ch, 32-192 kHz, 16/24 bit	DVD-Audio, Blu-ray disc, HD DVD, etc.
Bitstream (SD Audio)	Dolby Digital, DTS	DVD-Video, etc.
Bitstream (HD Audio)	Dolby Digital, Dolby Digital Plus, Dolby TrueHD, Dolby Atmos, DTS Digital Surround, DTS-HD High Resolution Audio, DTS-HD Master Audio, DTS:X	Online streaming media, Blu-ray disc, HD DVD

- Refer to documentation supplied with the playback device, and set the device appropriately.
- To decode audio bitstream signals on this unit, set the input source device appropriately so that the device outputs the bitstream audio signals directly. Refer to documentation supplied with the device for details.

HDMI (ARC)

Audio signal types	Audio signal formats	Compatible media
2ch Linear PCM	2ch, 32-96 kHz, 16/24 bit	TV
Bitstream (5.1ch)	Dolby Digital, DTS Digital	TV

DIGITAL AUDIO SIGNAL (OPTICAL/COAXIAL)

Audio signal types	Audio signal formats	Compatible media
2ch Linear PCM	2ch, 32-96 kHz, 16/24 bit	CD, DVD-Video, DVD-Audio, etc.
Bitstream (5.1ch)	Dolby Digital, DTS Digital	DVD-Video, etc.

The soundbar is compatible with the following video resolution:

VGA	• 720p/60 Hz, 50 Hz
480i/60 Hz	• 1080i/60 Hz, 50 Hz
480p/60 Hz	• 1080p/60 Hz, 50 Hz, 30 Hz, 25 Hz, 24 Hz
576i/50 Hz	• 4K/60 Hz, 50 Hz, 30 Hz, 25 Hz, 24 Hz
576p/50 Hz	

LEGAL & COMPLIANCE

FCC Class B Radio Interference Statement
NOTE: This equipment has been tested and found to comply with the limits for a Class B digital device, pursuant to Part 15 of the FCC Rules. These limits are designed to provide reasonable protection against harmful interference in a residential installation. This equipment generates, uses and can radiate radio frequency energy and, if not installed and used in accordance with the instructions, may cause harmful interference to radio communications.

However, there is no guarantee that interference will not occur in a particular installation. If this equipment does cause harmful interference to radio or television reception, which can be determined by turning the equipment off and on, the user is encouraged to try to correct the interference by one or more of the following measures:
1. Reorient or relocate the receiving antenna.
2. Increase the separation between the equipment and receiver.
3. Connect the equipment into an outlet on a circuit different from that to which the receiver is connected.
4. Consult the dealer or an experienced radio/TV technician for help.

This device complies with Part 15 of the FCC Rules. Operation is subject to the following two conditions: (1) this device may not cause harmful interference, and (2) this device must accept any interference received, including interference that may cause undesired operation.

Warning: Changes or modifications to this unit not expressly approved by the party responsible for compliance could void the user's authority to operate the equipment.

Notice:
1. The changes or modifications not expressly approved by the party responsible for compliance could void the user's authority to operate the equipment.
2. Shielded interface cables and AC power cord, if any, must be used in order to comply with the emission limits.
3. The manufacturer is not responsible for any radio or TV interference caused by unauthorized modification to this equipment. It is the responsibilities of the user to correct such interference.

RF Exposure Information
This device meets the government's requirements for exposure to radio waves. This device is designed and manufactured not to exceed the emission limits for exposure to radio frequency (RF) energy set by the Federal Communications Commission of the U.S. Government. This device complies with FCC radiation exposure limits set forth for an uncontrolled environment.

Disposal and Recycling
You must dispose of this product properly, according to local laws and regulations. Because this product contains electronic components and a battery, it must be disposed of separately from household waste. Contact local authorities to learn about disposal and recycling options.

Dolby ATMOS

COMPATIBLE WITH Dolby Vision

Manufactured under license from Dolby Laboratories. Dolby, Dolby Atmos, Dolby Surround, Dolby Vision Compatible and the double-D symbol are trademarks of Dolby Laboratories.

dts:X™

For DTS patents, see http://patents.dts.com. Manufactured under license from DTS Licensing Limited. DTS, the Symbol, DTS in combination with the Symbol, DTS:X, and the DTS:X logo are registered trademarks or trademarks of DTS, Inc. in the United States and/or other countries. © DTS, Inc. All Rights Reserved.

HDMI® HIGH-DEFINITION MULTIMEDIA INTERFACE

The terms HDMI and HDMI High-Definition Multimedia Interface, and the HDMI Logo are trademarks or registered trademarks of HDMI Licensing Administrator, Inc. in the United States and other countries.

Bluetooth®

The Bluetooth® word mark and logos are registered trademarks owned by Bluetooth SIG, Inc. and any use of such marks by Nakamichi LLC is under license. Other trademarks and trade names are those of their respective owners.

Qualcomm® aptX™

Qualcomm aptX is a product of Qualcomm Technologies International, Ltd. Qualcomm is a trademark of Qualcomm Incorporated, registered in the United States and other countries, used with permission. aptX is a trademark of Qualcomm Technologies International, Ltd., registered in the United States and other countries, used with permission.

STOP

PLEASE DO NOT RETURN THIS UNIT

ONE-STOP SUPPORT SOLUTION

www.nakamichi-usa.com/faq

CUSTOMER CARE

support@nakamichi-usa.com

(415) 805 6913

(Weekdays 10am - 7pm PST; Saturday, Holidays 10am - 5pm PST)

SPEAK

TO OUR SHOCKWAFE NINJAS IN USA TODAY

NAKAMICHI LLC ALL RIGHTS RESERVED.